CHNCHI

SERVO SYSTEM CATALOGUE

Chnchi Nanjing Electric Co.,Ltd.

Servo motor | Servo driver | Frequency converter

Content

- Company Introduction P01
- Certification P02
- ZE Series Servo Motor P03
- ZF Series General Use Servo Motor (Small Power) P13
- ZE Series Permanent magnet synchronous servo motor P17
- MZ800P Series Servo Driver P23
- MZ860 Series Servo Driver P27
- MZ870 Series Servo Driver P33
- MZ870N Series Servo Driver P38
- MZ630P Series Servo Driver P41
- MZ630N Series Servo Driver P48
- MZ820N Series Servo Driver P54
- MZ690 Series Servo Driver P57
- MZ650P Series Servo Driver P60

ABOUT US

Chnchi Electric Nanjing Co.,Ltd was established in 2007， covers an area of about 42000 square meters, is located in Nanjing where is known as the ancient Chinese capital. The company focuses on industrial electrical equipment of transmission control and energy saving technology, new energy generation equipment and its control technology. The company is private high-tech enterprises, and its business includes R & D, production,sales and service. On the basis of industrial automation control technology with independent intellectual property rights, the main business model is to provide customers with personalized solutions as fast as possible, realize the growth of enterprise value and customer value together.

The company has strong scientific research, and has an experienced high-quality management team and highly innovative research and development team, with advanced production equipment and testing facilities.

The company has passed the IS09001 quality management system certification, ISO14001 environmental management system certification, OHSAS 18001 occupational health and safety management system certification, a series of products pass through the authority of the domestic testing.

Our products

Industrial automation control and energy saving, the main products are low voltage inverter, and the integration of machine, servo system, permanent magnet synchronous motor, motor controller; Main service for three areas: the equipment manufacturing industry, energy saving and environmental protection, new energy. The products are widely used in oil fields, machine tools, metal products, plastics, wire and cable,printing and packaging， textile, building materials, metallurgy, coal, municipal, automotive and other industries. In the low voltage inverter market share, the company is one of the best manufacturers among the domestic brand. For integration and special plane products in many segments of the industry, our company takes the first or leading position.

The company has strong scientific research, and has an experienced high-quality management team and highly innovative research and development team, with advanced production equipment and testing facilities.

The company has passed the IS09001 quality management system certification, ISO14001 environmental management system certification, OHSAS 18001 occupational health and safety management system certification, a series of products pass through the authority of the domestic testing.

Quality commitment

We have strict control over production management, process technology, equipment maintenance and quality control. Advanced manufacturing equipment, testing instruments, professional technical personnel, integrated production and processing flow, we strictly follow the standard operating standards, to ensure the product quality of stability and accuracy.

Certification

ISO9001

Certificate of Environmental Management System

We hereby certify

Chnchi Nanjing Electric Co., LTD

System is in conformity with

GB/T 24001-2016/ISO14001:2015

Certified range

Environmental management activities involved in the R&D, production and service of servo motors, servo drive and frequency inverters

Issuer: 孟荣舟

Shanghai Changqhi Certification Co., Ltd.

ISO14001

Certificate of Occupational Health and Safety Management System

We hereby certify

Chnchi Nanjing Electric Co., LTD

System is in conformity with

GB/T45001-2020/ISO 45001:2018

Certified range

Occupational health and safety management activities involved in R&D, production and service of servo motors, servo drive and frequency inverters

Issuer: 孟荣舟

OHSAS18001

Certificate of Quality Management System

We hereby certify

Chnchi Nanjing Electric Co., LTD

System is in conformity with

GB/T19001-2016/ISO 9001:2015

Certified range

Servo motor, servo drive, frequency inverters research, production and service

Issuer: 孟荣舟

Shanghai Changqhi Certification Co., Ltd.

Certificate

Certificate – Сертификат – 證明書 – Certificat – 증명서 – 证明书

Certificate of Compliance

Certificate – Сертификат – 證明書 – Certificat – 증명서 – 证明书

Annex I

Certificate – Сертификат – 證明書 – Certificat – 증명서 – 证明书

Certificate of Compliance

Certificate's Holder: Chnchi Nanjing Electric Co.Ltd.

Certificate – Сертификат – 證明書 – Certificat – 증명서 – 证明书

Annex I

Patent

发明专利证书

实用新型专利证书

实用新型专利证书

实用新型专利证书

ZE Series Servo Motor

Name Rule

ZE	60	MA	1	-	0D40	D	Q	N	M
①	②	③	④		⑤	⑥	⑦	⑧	⑨

① Product code

② Frame No.

Code	Specs
40	40 Flange
60	60 Flange
80	80 Flange
130	130 Flange

③ Inertia rated voltage

Code	Specs
MA	middle & high inertia 220V
MB	middle & high inertia 380V
HA	middle & high inertia 220V(130flange)
HB	middle & high inertia 380V(130flange)

④ Code name

Code	Specs
1	standard design

⑤ Rated power

Code	Specs
0D10	100W
0D20	200W
0D40	400W
0D75	750W
0D85	850W
0001	1.0kW
01D3	1.3kW
01D5	1.5kW
0002	2.0kW
0003	3.0kW

⑥ Rated speed

Code	Specs
B	1500rpm
C	2000rpm
D	3000rpm

⑦ Encoder code

Code	Specs
I	17 bit photoelectric absolute value single turn
Q	17 bit magnetic encoder absolute value single turn
S	17 bit magnetic encoder absolute value multi turn
J	17 bit photoelectric absolute value multi turn
L	23 bit photoelectric absolute value single turn
P	23 bit photoelectric absolute value multi turn

⑧ Brake selection

Code	Specs
N	without brake
Y	with brake

⑨ Keyway oil seal selection

Code	Specs
M	with key slot & oil seal

Product Characteristic

Power range: 100W-3kW

Design: adopt the latest 5-pair pole IPM design

Intelligence

- 0 Equipped with magnetic encoder/photoelectric encoder
- 0 The maximum resolution of magnetic encoder is 23bit (8388608p/r)
- 0 Work system: S1 continuous work
- 0 Protection level: IP65/IP67 (optional)
- 0 The special structure of encoder installation has strong anti-interference ability
- 0 The economic cost advantage of mass production is more significant

High overload capacity: up to 3 times the instantaneous maximum overload capacity

High-speed small servo motor: rated speed 3000 rpm, maximum speed 6000 rpm;rated speed 2000 rpm, maximum speed 3000 rpm;rated speed 1500 rpm, maximum speed 3000 rpm

Miniaturization: embedded structure, integrated structure design, small size, equivalent power saving of 20%

Servo Motor ZE40MA1-0D10D□□M Specifications

ZE40MA1-0D10D outline

NT characteristic

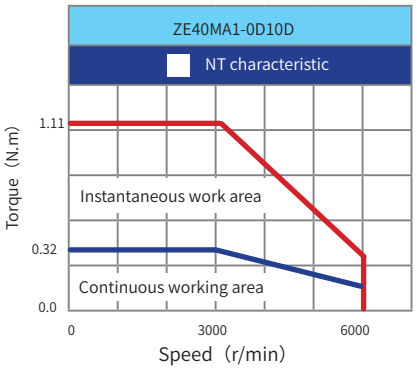

Continuous torque-ambient temperature

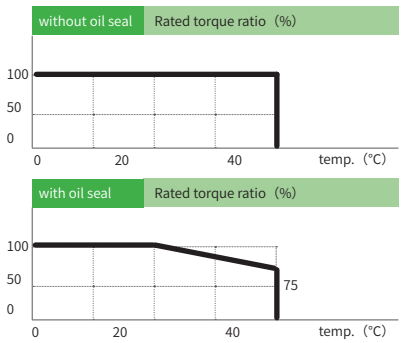

Specification Table

Model type : ZE40MA1-0D10D□□M	Unit	100W
Flange size	mm	□ 40
Rated voltage	V	AC220
Rated power	W	100
Rated torque	N.m	0.32
Peak torque	N.m	1.11
Rated current	Arms	0.84
Max current	Arms	2.9
Rated speed	r/min	3000
Maximum speed	r/min	6500
Torque coefficient	N.m/Arms	0.3±10%
EMF constant	V/KRPM	24.5±10%
Line-to-line resistance	Ω	18.15±10%
Line-to-line inductance	mH	9.81±10%
Moment of inertia	$kg.m^2 \times 10^{-4}$	0.66±10%
Polar logarithm	Pair	5
Feedback element	Encremental	17bit
Protection grade	IP65/IP67(Optional)(Except the shaft penetration part)	
Insulation class	F	
Insulation resistance	＞200MΩ DC500V	
Working temperature	-20°C -50°C	
Storage temperature	20%-80% no condensation	
Use environment	Keep away from active gas, combustible gas, oil and ash	
Altitude	Below 1000m Derating use above 1000m	
Test conditions	Fixed on 200*200*20 aluminum plate	
Cable specification	$4*0.75mm^2+2p*0.2mm^2$ High flexible drag chain cable ,with bending times not less than 5 million times	

Drawing

unit: mm

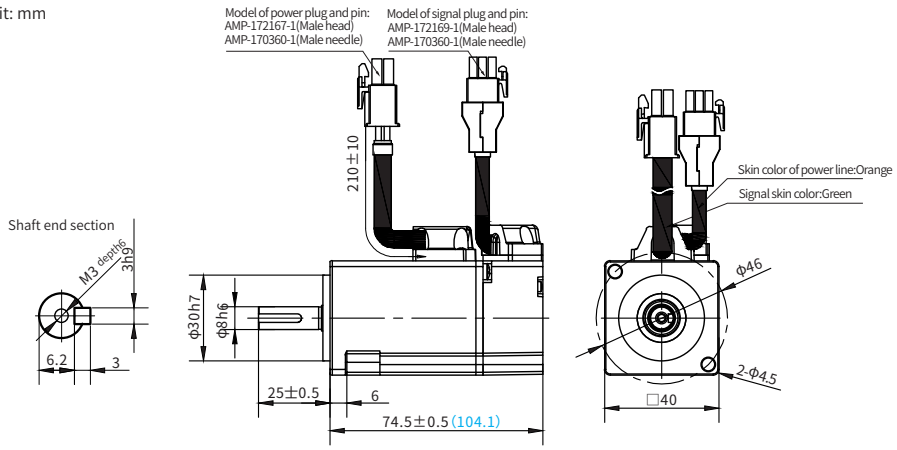

Note: The dimensions in brackets are the length of the motor with brake

Servo Motor ZE60MA1-0D20D□□M Specifications

ZE60MA1-0D20D outline

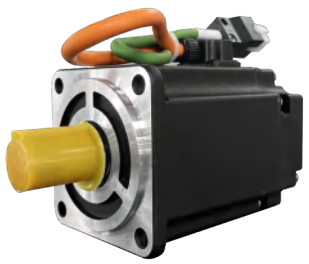

NT characteristic

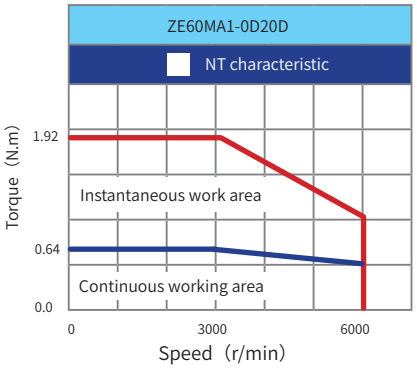

Continuous torque-ambient temperature

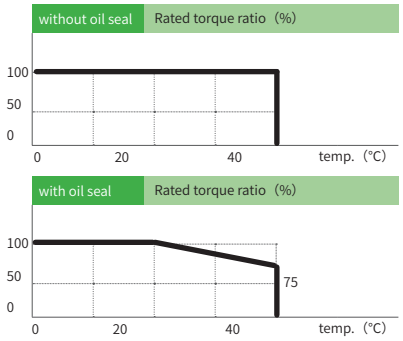

Specification Table

Model type ： ZE60MA1-0D20D□□M	Unit	200W
Flange size	mm	□ 60
Rated voltage	V	AC220
Rated power	W	200
Rated torque	N.m	0.64
Peak torque	N.m	1.92
Rated current	Arms	1.7
Max current	Arms	5.7
Rated speed	r/min	3000
Maximum speed	r/min	6000
Torque coefficient	N.m/Arms	0.38±10%
EMF constant	V/KRPM	23±10%
Line-to-line resistance	Ω	4.5±10%
Line-to-line inductance	mH	3.7±10%
Moment of inertia	$kg.m^2 \times 10^{-4}$	0.28±10%
Polar logarithm	Pair	5
Feedback element	Encremental	17bit
Protection grade	IP65/IP67(Optional)(Except the shaft penetration part)	
Insulation class	F	
Insulation resistance	＞200MΩ DC500V	
Working temperature	-20°C -50°C	
Storage temperature	20%-80% no condensation	
Use environment	Keep away from active gas, combustible gas, oil and ash	
Altitude	Below 1000m Derating use above 1000m	
Test conditions	Fixed on 200*200*20 aluminum plate	
Cable specification	$4*0.75mm^2+2p*0.2mm^2$ High flexible drag chain cable ,with bending times not less than 5 million times	

Drawing

unit: mm

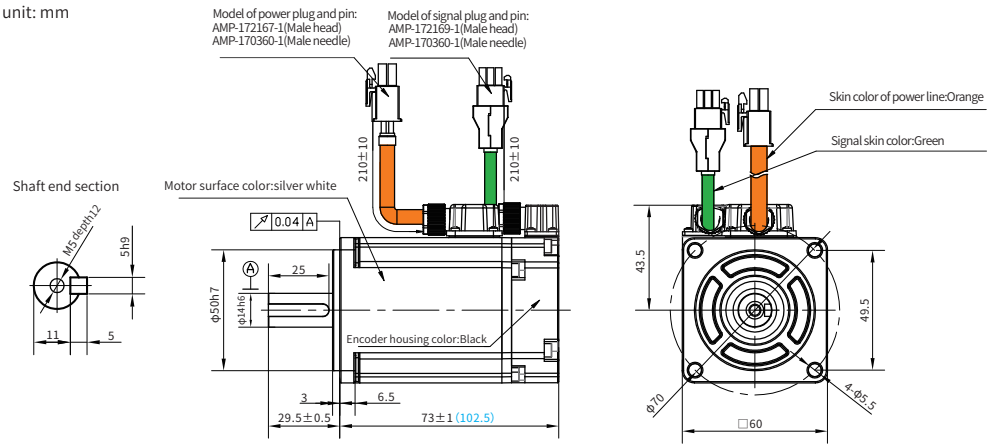

Note: The dimensions in brackets are the length of the motor with brake

Servo Motor ZE60MA1-0D40D□□M Specifications

ZE60MA1-0D40D outline

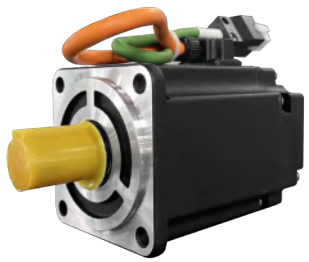

NT characteristic

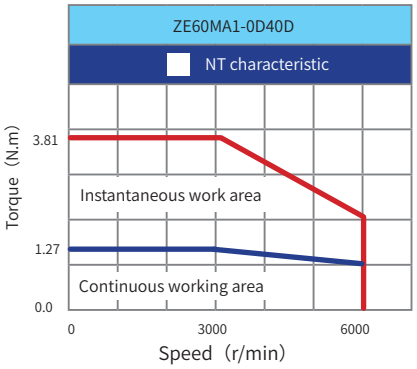

Continuous torque-ambient temperature

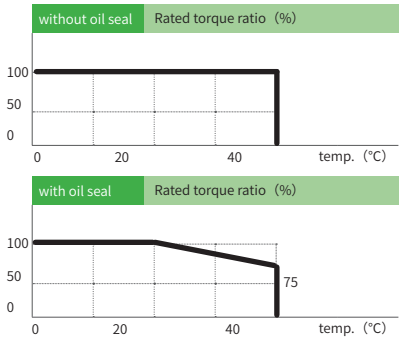

Specification Table

Model type ： ZE60MA1-0D40D□□M	Unit	400W
Flange size	mm	□ 60
Rated voltage	V	AC220
Rated power	W	400
Rated torque	N.m	1.27
Peak torque	N.m	3.81
Rated current	Arms	2.8
Max current	Arms	7.5
Rated speed	r/min	3000
Maximum speed	r/min	6000
Torque coefficient	N.m/Arms	0.5±10%
EMF constant	V/KRPM	31±10%
Line-to-line resistance	Ω	3.4±10%
Line-to-line inductance	mH	5.8±10%
Moment of inertia	$kg.m^2 \times 10^{-4}$	0.53±10%
Polar logarithm	Pair	5
Feedback element	Encremental	17bit
Protection grade	IP65/IP67(Optional)(Except the shaft penetration part)	
Insulation class	F	
Insulation resistance	＞200MΩ DC500V	
Working temperature	-20°C -50°C	
Storage temperature	20%-80% no condensation	
Use environment	Keep away from active gas, combustible gas, oil and ash	
Altitude	Below 1000m Derating use above 1000m	
Test conditions	Fixed on 200*200*20 aluminum plate	
Cable specification	$4*0.75mm^2+2p*0.2mm^2$ High flexible drag chain cable ,with bending times not less than 5 million times	

Drawing

unit: mm

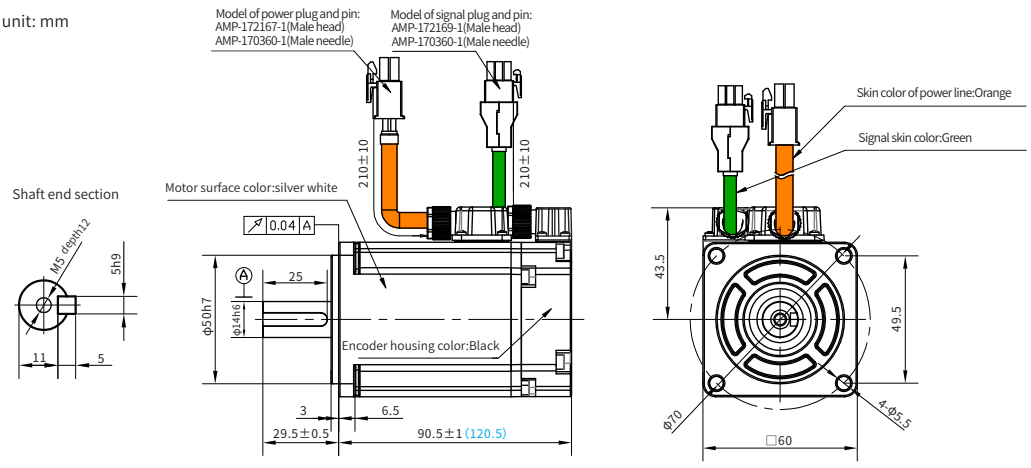

Note: The dimensions in brackets are the length of the motor with brake

Servo Motor ZE80MA1-0D75D□□M Specifications

ZE80MA1-0D75D outline

NT characteristic

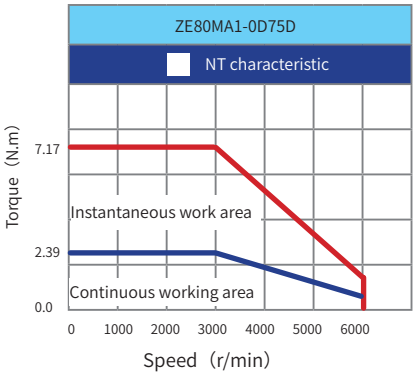

Continuous torque-ambient temperature

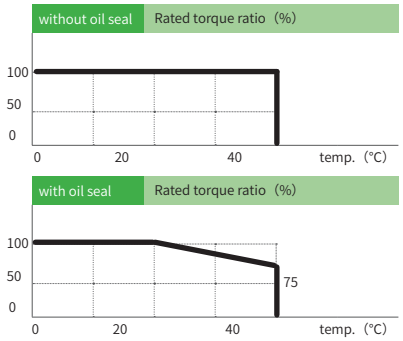

Specification Table

Model type ： ZE80MA1-0D75D□□M	Unit	750W
Flange size	mm	□ 80
Rated voltage	V	AC220
Rated power	W	750
Rated torque	N.m	2.39
Peak torque	N.m	7.17
Rated current	Arms	4.8
Max current	Arms	13.3
Rated speed	r/min	3000
Maximum speed	r/min	6000
Torque coefficient	N.m/Arms	0.54±10%
EMF constant	V/KRPM	33±10%
Line-to-line resistance	Ω	1.1±10%
Line-to-line inductance	mH	2.4±10%
Moment of inertia	$kg.m^2 \times 10^{-4}$	1.5±10%
Polar logarithm	Pair	5
Feedback element	Encremental	17bit
Protection grade	IP65/IP67(Optional)(Except the shaft penetration part)	
Insulation class	F	
Insulation resistance	＞200MΩ DC500V	
Working temperature	-20°C -50°C	
Storage temperature	20%-80% no condensation	
Use environment	Keep away from active gas, combustible gas, oil and ash	
Altitude	Below 1000m Derating use above 1000m	
Test conditions	Fixed on 250*250*20 aluminum plate	
Cable specification	$4*0.75mm^2+2p*0.2mm^2$ High flexible drag chain cable ,with bending times not less than 5 million times	

Drawing

unit: mm

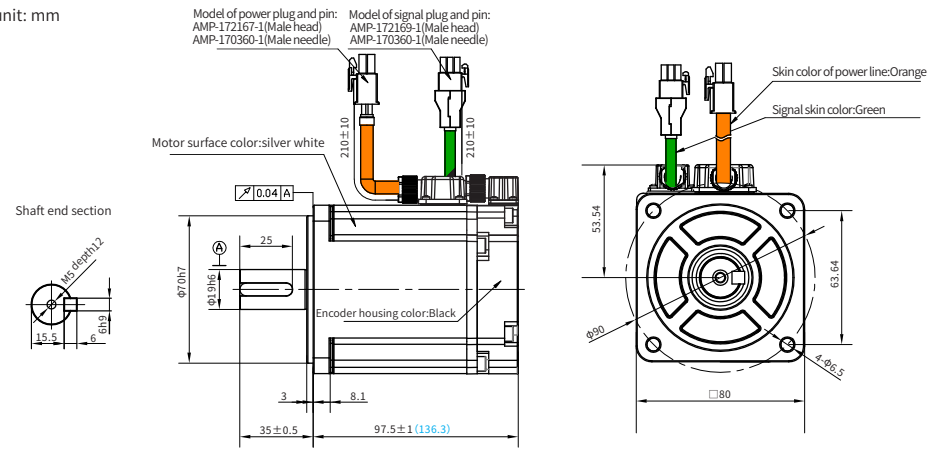

Note: The dimensions in brackets are the length of the motor with brake

Servo Motor ZE80MA1-0001D□□M Specifications

ZE80MA1-0001D outline

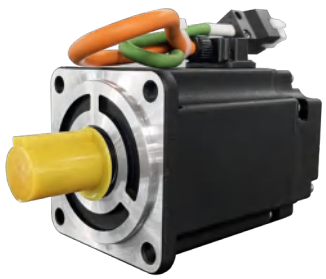

NT characteristic

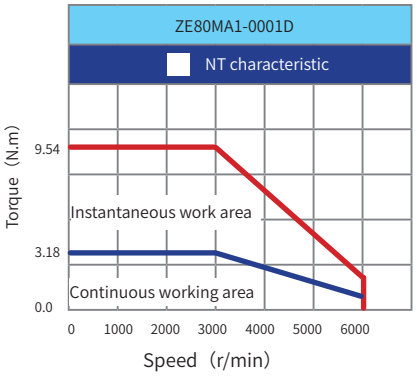

Continuous torque-ambient temperature

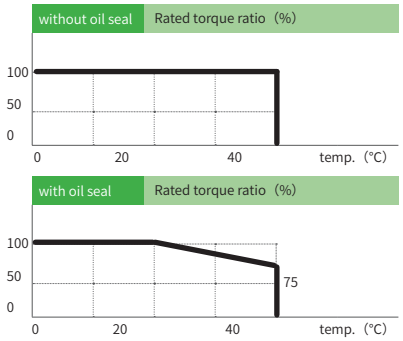

Specification Table

Model type ： ZE80MA1-0001D□□M	Unit	1000W
Flange size	mm	□ 80
Rated voltage	V	AC220
Rated power	W	1000
Rated torque	N.m	3.18
Peak torque	N.m	9.54
Rated current	Arms	5.8
Max current	Arms	18.1
Rated speed	r/min	3000
Maximum speed	r/min	6000
Torque coefficient	N.m/Arms	0.54±10%
EMF constant	V/KRPM	34±10%
Line-to-line resistance	Ω	0.68±10%
Line-to-line inductance	mH	1.4/1.7±10%
Moment of inertia	$kg.m^2 \times 10^{-4}$	1.97±10%
Polar logarithm	Pair	5
Feedback element	Encremental	17bit
Protection grade	IP65/IP67(Optional)(Except the shaft penetration part)	
Insulation class	F	
Insulation resistance	＞200MΩ DC500V	
Working temperature	-20°C -50°C	
Storage temperature	20%-80% no condensation	
Use environment	Keep away from active gas, combustible gas, oil and ash	
Altitude	Below 1000m Derating use above 1000m	
Test conditions	Fixed on 250*250*20 aluminum plate	
Cable specification	$4*0.75mm^2+2p*0.2mm^2$ High flexible drag chain cable ,with bending times not less than 5 million times	

Drawing

unit: mm

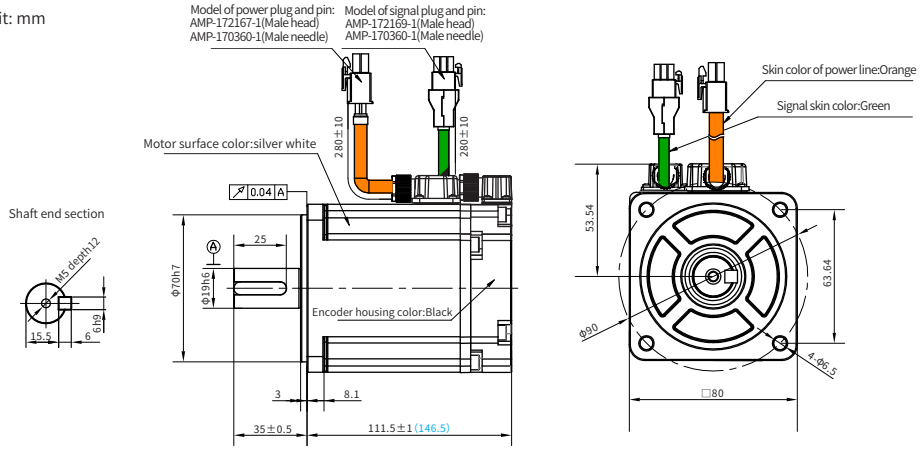

Note: The dimensions in brackets are the length of the motor with brake

Servo Motor ZE130HA1 Specifications

Model type		Unit	ZE130HA1-0D85B	ZE130HA1-0001C	ZE130HA1-01D3B	ZE130HA1-01D5C	ZE130HA1-01D8B	ZE130HA1-0002C	ZE130HA1-02D3B	ZE130HA1-0003C
Flange size		mm	□ 130							
Rated voltage		V	AC220							
Rated power		W	850	1000	1300	1500	1800	2000	2300	3000
Rated torque		N.m	5.4	4.77	8.3	7.16	11.4	9.55	14.64	14.3
Instantaneous peak torque		N.m	16.9	14.2	20.75	21.8	28.9	24.5	43.7	43.1
Rated current		Arms	6.7	5.7	8	6.8	11.2	7.8	11.2	14
Max current		Arms	20.6	17.2	21.5	20.3	29.1	22.2	35.8	44.7
Rated speed		r/min	1500	2000	1500	2000	1500	2000	1500	2000
Maximum speed		r/min	3000	3000	3000	3000	3000	3000	3000	3000
Torque constant		N.m/A	0.82	0.84	1.04	1.05	1.02	1.22	1.31	1.02
Three-phase induced voltage constant		MV(r/min)	56.5	56.5	67	46.91	70	69	64.8	64.8
Rated power change rate (without brake)		kW/S	21	36.9	35	56	56	75.4	94.6	94.6
Rated power change rate (with brake)		kW/S	18.3	30.8	31.6	49.3	18.3	68.6	88	88
Mechanical time constant (without brake)		ms	2.75	1.76	2.23	1.41	2.52	1.24	1.08	1.08
Mechanical time constant (with brake)		ms	3.15	2.11	2.46	1.6	2.63	1.37	1.14	1.14
Electrical time constant		ms	10.3	9.5	10.7	12.7	14.1	13.9	15.2	15.2
Motor rotor inertia (without brake)		$\times 10^{-4}$kg*m^2	6.2	6.2	9.2	9.2	12.3	12.3	18.8	18.8
Motor rotor inertia (with brake)		$\times 10^{-4}$kg*m^2	7.5	7.5	10.5	10.5	13.5	13.5	19.9	19.9
Line resistance		Ω	0.71	0.71	0.48	0.39	0.44	0.375	0.23	0.23
Inductance Ld		mH	5.72	5.72	4.76	3.23	6	3.6	2.78	2.78
Inductance Lq		mH	5.72	5.72	10.57	3.23	6	3.6	2.78	2.78
Protection grade			IP65/IP67(Optional)(Except the shaft penetration part)							
Brake performance parameters	Rated voltage	V	DC24±10%							
	Rated power	W	23							
	Static friction torque	N.m	⩾ 16							
	Attract time	ms	< 80							
	Release time	ms	< 40							
	Release voltage	V	> 0.5							
	Running noise	dB	< 65							

Servo Motor ZE130HB1 Specifications

Model type		Unit	ZE130HB1-0D85B	ZE130HB1-0001C	ZE130HB1-01D3B	ZE130HB1-01D5C	ZE130HB1-01D8B	ZE130HB1-0002C	ZE130HB1-02D3B	ZE130HB1-0003C
Flange size		mm	□130							
Rated voltage		V	AC380							
Rated power		W	850	1000	1300	1500	1800	2000	2300	3000
Rated torque		N.m	5.4	4.77	8.3	7.16	11.4	9.55	14.3	14.3
Instantaneous peak torque		N.m	16.00	13.85	21.3	17.9	28.9	27.7	35.75	36.6
Rated current		Arms	2.9	2.5	4.3	5.7	5.5	5	8.2	7.5
Max current		Arms	8.8	7.5	11.1	14.25	15.2	14	21.1	19.4
Rated speed		r/min	1500	2000	1500	2000	1500	2000	1500	2000
Maximum speed		r/min	3000	3000	3000	3000	3000	3000	2500	3000
Motor rotor inertia		N.m/A	6.2	6.2	9.2	9.2	12.3	12.3	18.6	18.8
Line resistance		MV(r/min)	2.9	2.9	2.11	0.81	1.11	1.165	0.69	0.69
Inductance Ld		kW/S	24	24	20.1	4.56	12.65	10.9	4.54	4.54
Inductance Lq		kW/S	24	24	20.1	5.93	12.65	10.9	5.97	5.97
Protection grade			IP65/IP67(Optional)(Except the shaft penetration part)							
Brake performance parameters	Rated voltage	V	DC24±10%							
	Rated power	W	23							
	Static friction torque	N.m	⩾16							
	Attract time	ms	<80							
	Release time	ms	<40							
	Release voltage	V	>0.5							
	Running noise	dB	<65							

Servo Motor ZE130 Drawing

unit: mm

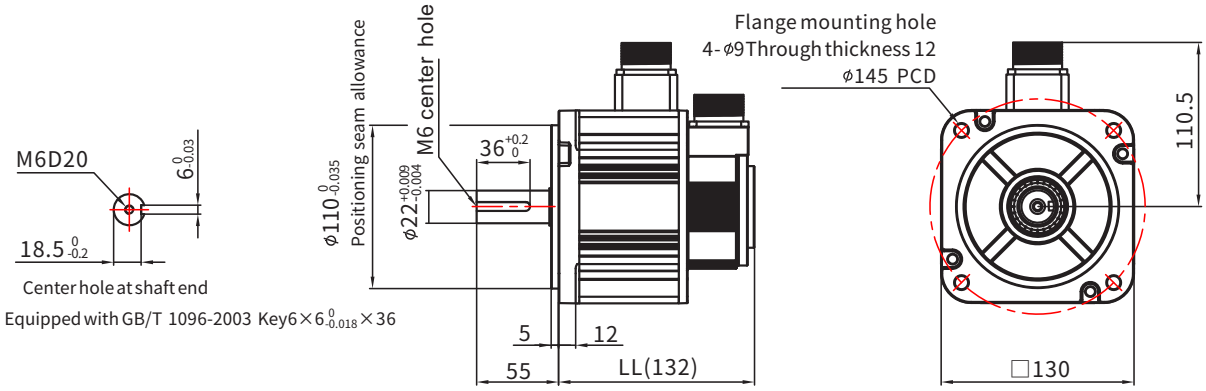

Model type	Regular model body length LL	Brake model body length LL
ZE130H*1-0D85B**M ZE130H*1-0001C**M	132	160
ZE130H*1-01D3B**M ZE130H*1-01D5C**M	146	174
ZE130H*1-01D8B**M ZE130H*1-0002C**M	160	188
ZE130H*1-0003C**M ZE130H*1-02D3B**M	188	216

Brake power line plug
(6-pin male connector)

Standard power cord plug
(4-pin male)

Signal line plug
(15-pin male connector)

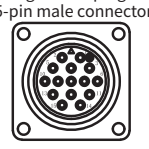

Servo Motor ZE130HA1 NT characteristic

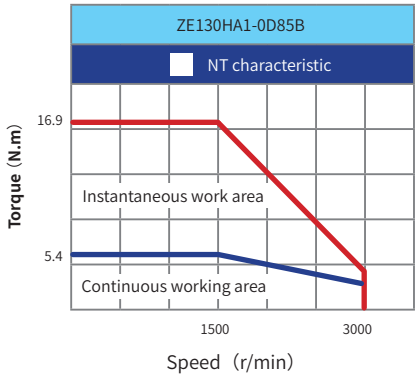

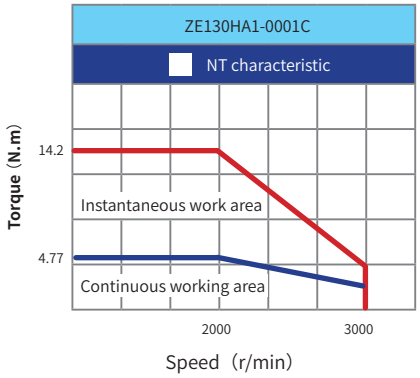

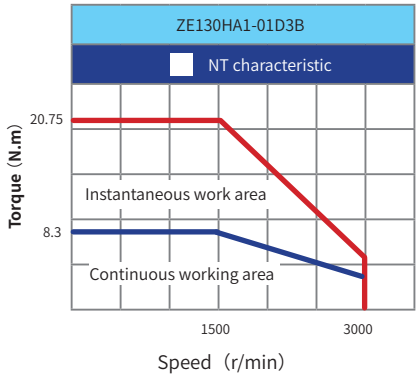

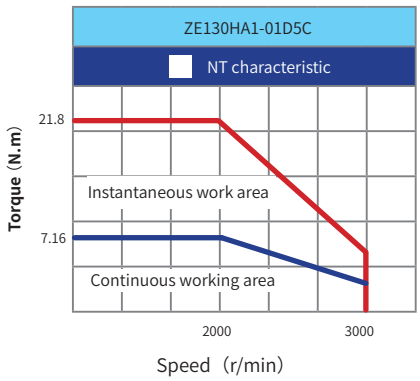

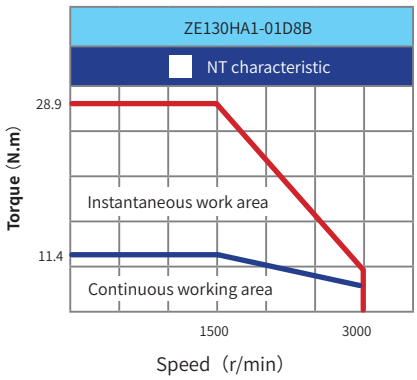

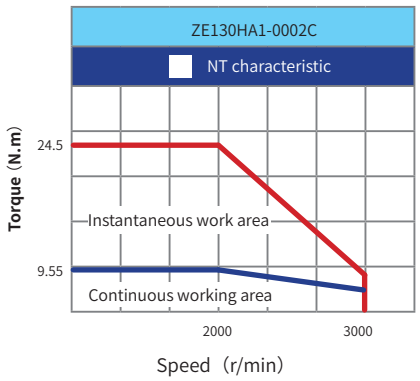

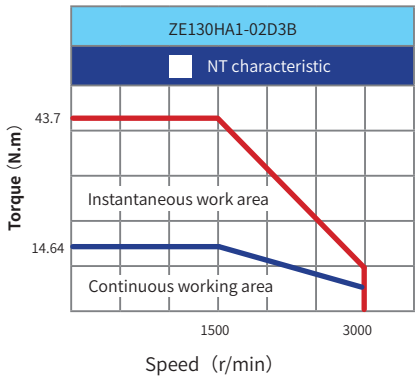

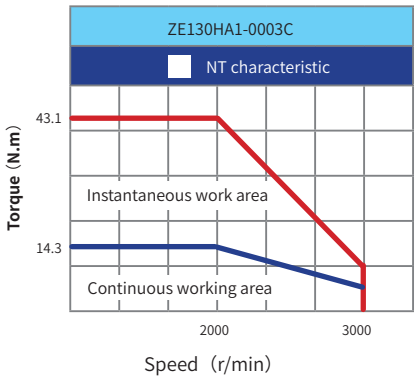

Servo Motor ZE130HB1 NT characteristic

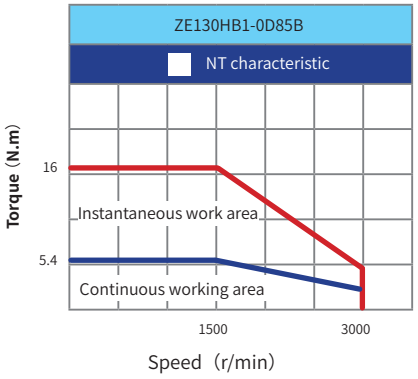

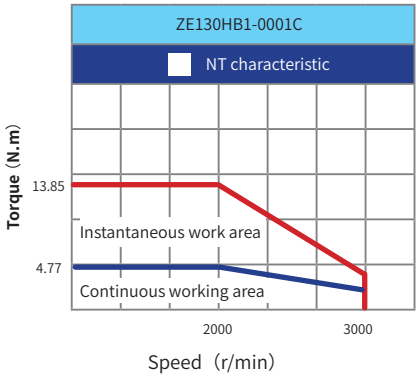

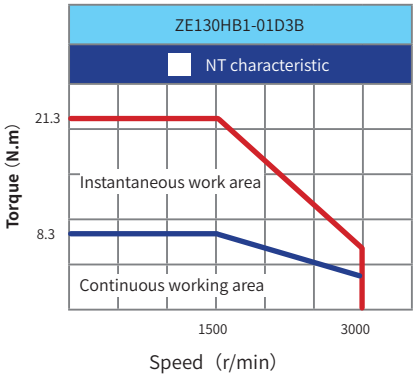

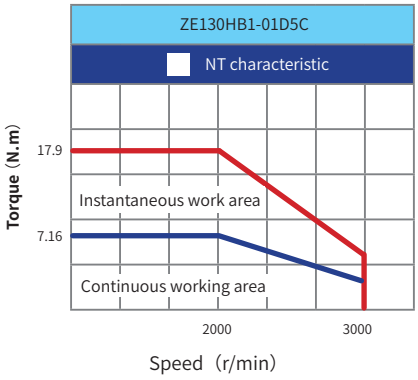

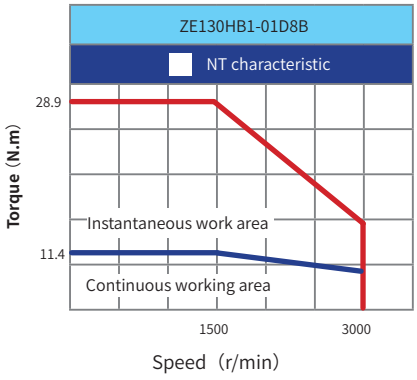

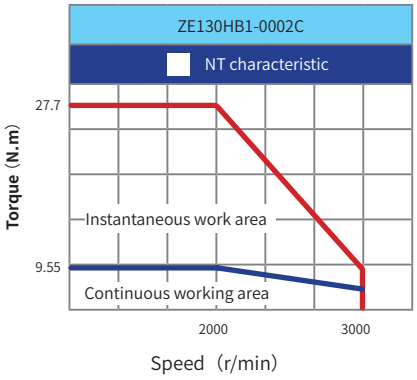

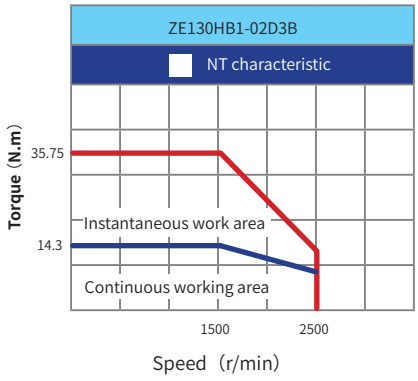

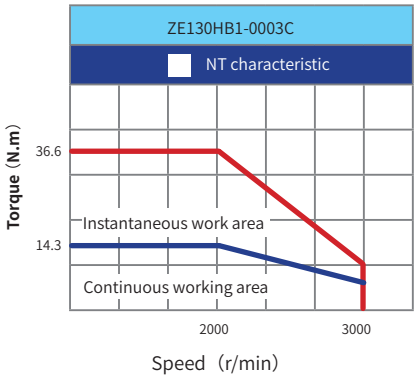

ZF Series General Use Servo Motor (small power)

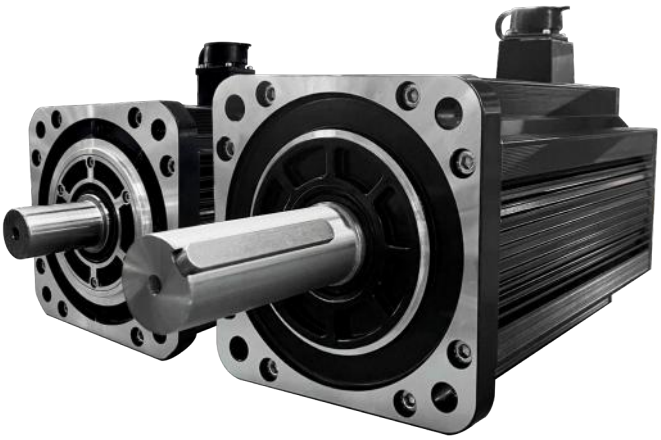

Motor technical characteristics

★ **Ultra-stability:** use rare earth permanent magnet materials with high performance and high magnetic energy product.

★ **Long life, low noise:** the motor casing is designed with air grooves, which increases the heat dissipation area and prolongs the life of the motor.

★ **High precision and high response:** the motor adopts a high-resolution encoder, so that the motor precision can reach more than 0.036° , which meets the requirements of high-precision control. and can support 17bit / 23bit (131,072 lines / 8388,608 lines) absolute encoder to improve positioning accuracy and low-speed running accuracy. (As shown in Figure 1 on the right)

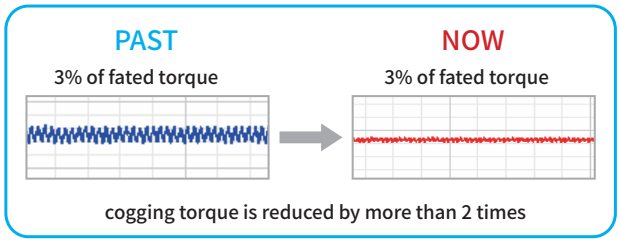

Figure 1

Motor technical characteristics

★ **Structure:** fully enclosed, self-cooling;

★ **Installation method:** flange installation;

★ **Working system:** S1 continuous;

★ **Insulation class:** B/F class;

★ **Insulation withstand voltage:** AC1500V, 1 minute;

★ **Insulation resistance:** DC500V, above 50MΩ;

★ **Vibration:** 5G;

★ **Altitude:** altitude 1000;

★ **Working temperature:** 0-40°C (no freezing);

★ **Working humidity:** 20%~80% (no condensation);

★ **Protection method:** fully enclosed self-cooling IP 65 (except the shaft penetration part);

Name Rule

180	ZF	MA	1	-	0D75	D	B	Y	M
①	②	③	④		⑤	⑥	⑦	⑧	⑨

① Frame No.

Code	Specs
110	110 Flange
180	180 Flange

② Product code

③ Inertia rated voltage

Code	Specs
MA	middle & small inertia220V
MB	middle & small inertia380V

④ Code name

Code	Specs
1	standard design
2	Non-standard design

⑤ Rated power

Code	Specs
0D80	0.8kW
01D2	1. 2kW
01D5	1.5kW
0003	3.0kW
0004	4.0kW
04D5	4.5kW
05D5	5.5kW
07D5	7.5kW
0011	11kW

⑥ Rated speed

Code	Specs
A	1000rpm
B	1500rpm
C	2000rpm
F	2500rpm
D	3000rpm

⑦ Encoder code

Code	Specs
K	Incremental 2500P/R
B	Non-Incremental
I	17 bit photoelectric absolute value single turn
J	17 bit photoelectric absolute value multi turn
L	23 bit photoelectric absolute value single turn
P	23bit photoelectric absolute value multi turn
Q	17 bit magnetic encoder absolute value single turn
S	17 bit magnetic encoder absolute value multi turn
R	Rotary encoder

⑧ Brake selection

Code	Specs
N	without brake
Y	with brake

⑨ Keyway oil seal selection

Code	Specs
K	with key slot without oil seal
O	with oil seal without key slot
M	with key slot & oil seal

Servo Motor 110ZF Specifications

Model type	Rated power (kW)	Rated Speed (rpm)	Rated torque (N.m)	Rated voltage (V)	Rated current (A)	Max Speed (rpm)	Max torque (N.m)	Phase resistance (Ω)	Phase inductance (mH)	Torque constant (N.m/A)	Rotor inertia (kg*m2)	Number of poles	Insulation class	Protection level	Use environment
110ZFMA1-0D80C	0.8	2000	3.82	220	3.5	2500	11.4	1.97	10.5	1.18	0.55×10^{-4}	8	F class (155°C)	IP65(Except the shaft penetration part)	Temperature: 0-40 °C (no freezing), humidity: 20% -80% (no condensation)
110ZFMA1-01D2C	1.2	2000	5.73	220	5.6	2500	15.4	1.67	6.6	1.33	0.77×10^{-4}	8			
110ZFMA1-01D2D	1.2	3000	3.82	220	5.6	3300	11.5	1.73	5.6	0.8	0.55×10^{-4}	8			
110ZFMA1-01D5D	1.5	3000	4.77	220	6.5	3300	14.3	1.04	3.45	0.83	0.64×10^{-4}	8			

Servo Motor 110ZF outline drawing and dimension table

unit: mm

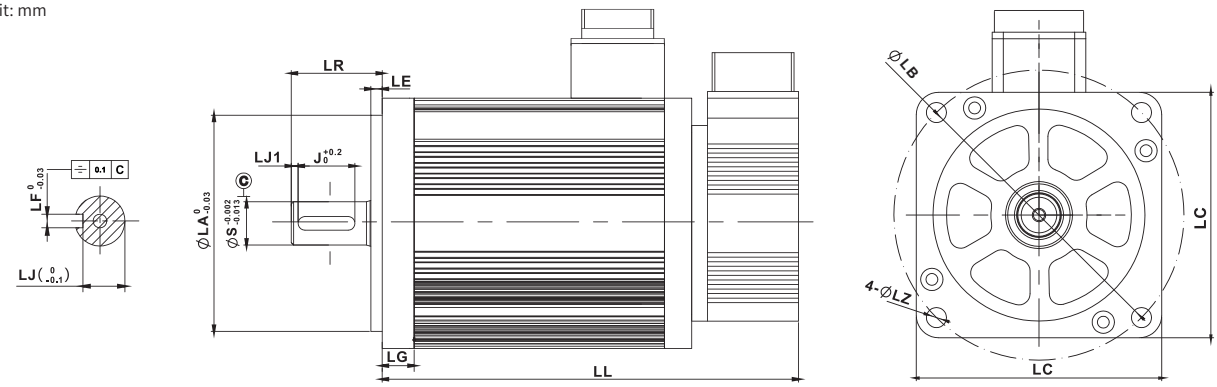

Servo motor model	Flange size					Shaft end size							
	LC	LA	LB	LZ	LL(with brake)	S	L J	J	LF1	LF2	LR	LE	LG
110ZFMA1-0D80C	110	95	130	9	179(219)	19	15.5	30	6	6	45	5	12
110ZFMA1-01D2C	110	95	130	9	209(249)	19	15.5	30	6	6	45	5	2
110ZFMA1-01D2D	110	95	130	9	209(249)	19	15.5	30	6	6	45	5	12
110ZFMA1-01D5D	110	95	130	9	209(249)	19	15.5	30	6	6	45	5	12

Servo Motor 180ZF Specifications

Model type	Rated power (kW)	Rated Speed (rpm)	Rated torque (N.m)	Rated voltage (V)	Rated current (A)	Max Speed (rpm)	Max torque (N.m)	Max current (A)	Torque constant (N.m/A)	Rotor inertia (kg*cm2)	Number of poles	Insulation class	Protection level	Use environment
180ZFMA1-0003B	3	1500	19.1	220	12	1800	47	24	1.8	49.5×10^{-4}	8	F class (155°C)	IP65(Except the shaft penetration part)	Temperature: 0-40 °C (no freezing), humidity: 20% -80% (no condensation)
180ZFMA1-0003A	3	1000	28.6	220	12	1500	67	24	2.7	63.7×10^{-4}	8			
180ZFMA1-0004B	4	1500	25.4	220	17	1800	76.5	51	1.67	63.7×10^{-4}	8			
180ZFMA1-04D5C	4.5	2000	21.4	220	18.4	2200	53	34	1.3	63.7×10^{-4}	8			
180ZFMA1-04D5B	4.5	1500	28.6	220	18.4	1800	85.8	55.2	1.71	77.9×10^{-4}	8			
180ZFMA1-05D5B	5.5	1500	35	220	23.5	1800	105	70.5	1.6	92×10^{-4}	8			
180ZFMB1-0003B	3	1500	19.1	380	6.8	1800	47	24	1.58	49.5×10^{-4}	8			
180ZFMB1-04D5C	4.5	2000	21.4	380	10	2300	53.7	25	1.26	53.7×10^{-4}	8			
180ZFMB1-04D5B	4.5	1500	28.6	380	10	1800	71.6	25	2.67	71.6×10^{-4}	8			
180ZFMB1-05D5B	5.5	1500	35	380	12	1850	87.5	30	3	92×10^{-4}	8			
180ZFMB1-07D5B	7.5	1500	47.7	380	17.5	1850	119.4	43.75	2.9	104×10^{-4}	8			
180ZFMB1-0011B	11	1500	70	380	23	1850	154	50.6	3.04	150×10^{-4}	8			

Servo Motor 180ZF outline drawing and dimension table

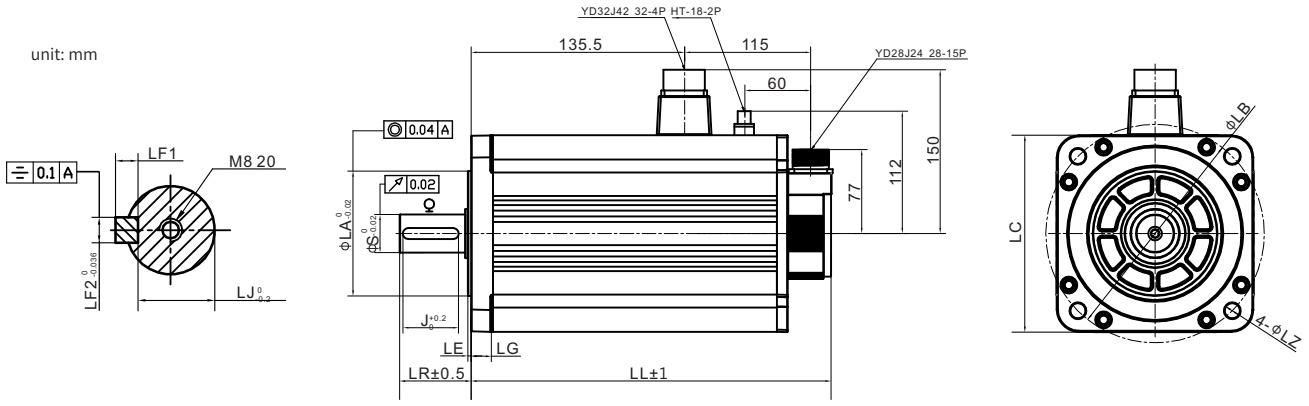

Servo motor model	Flange size					Shaft end size							
	LC	LA	LB	LZ	LL(with brake)	S	L J	J	LF1	LF2	LR	LE	LG
180ZFMA1-0003B	180	114.3	200	13	222(275)	35	30	51	8	10	65	3	20
180ZFMA1-0003A	180	114.3	200	13	262(315)	35	30	51	8	10	65	3	20
180ZFMA1-0004B	180	114.3	200	13	242(295)	35	30	51	8	10	65	3	20
180ZFMA1-04D5C	180	114.3	200	13	242(295)	35	30	51	8	10	65	3	20
180ZFMA1-04D5B	180	114.3	200	13	262(315)	35	30	51	8	10	65	3	20
180ZFMA1-05D5B	180	114.3	200	13	282(335)	35	30	51	8	10	65	3	20
180ZFMB1-0003B	180	114.3	200	13	222(275)	35	30	51	8	10	65	3	20
180ZFMB1-04D5C	180	114.3	200	13	242(295)	35	30	51	8	10	65	3	20
180ZFMB1-04D5B	180	114.3	200	13	262(315)	35	30	51	8	10	65	3	20
180ZFMB1-05D5B	180	114.3	200	13	282(335)	35	30	51	8	10	65	3	20
180ZFMB1-07D5B	180	114.3	200	13	342(395)	35	30	51	8	10	65	3	20
180ZFMB1-0011B	180	114.3	200	13	382(435)	35	30	51	8	10	65	3	20

ZE Series embedded permanent magnet synchronous servo motor

Name Rule

ZE	18	15	20.4	130	*	*	*	-	X
①	②	③	④	⑤	⑥	⑦	⑧		⑨

① Product code

② Flange code

Code	Specs
18	180mm（200*200 Mount）
25	250mm（264*264 Mount）

③ Rated speed

Code	Specs
15	1500rpm
17	1700rpm
20	2000rpm

④ Rated power

Code	Specs
7.1	7.1kW
20.4	20.4kW
……	
111	111kW

⑤ Rated torque

Code	Specs
130	130N.m
282	282N.m
530	530N.m

⑥ Encoder code

Code	Specs
R	Rotary encoder
B	Non-Incremental
I	17 bit photoelectric absolute value single turn
L	23 bit photoelectric absolute value single turn
T	Universal Joint Encoder
N	No encoder

⑦ Rated voltage

Code	Specs
2	220V
3	380V
4	440V/460V/480V

⑧ Brake

Code	Specs
Y	with brake
N(new) Vacant(old)	No Brake

⑨ Product /Customization code

"X" refers to the product group code, custom code, or customer code, which can be used as the suffix "xxxxxxxxxx," where each "x" can be a digit (0–9), an uppercase letter (A–Z), a hyphen (-), a dot (.), or a space.

Label	Code type
05A	Product group code
05X	Product group code
05AXXX	A customized code
05XXXX	A customized code

ZE18-A series Servo Motor Model and Specification

Product Series	Rated Power (kW)	Rated Speed (rpm)	Rated Torque (N.m)	Rated Voltage (V/1krpm)	Rated Current (A)	Frequency (HZ)	Counter Electromotive Force (V/**rpm)	Max Speed (rpm)	Max Torque (N.m)	Max Current (A)	Rotor inertia (kgcm^2)	Line Resistance (Ω)	Line Inductance Ld (mH)	Line Inductance Lq (mH)
1802A	8.6	1500	55	380	16.2	100	214.5	2200	95.1	38.1	58	1.33	13.8	28.86
	9.8	1700	55	380	19.2	113.3	179.7	2500	100.2	45.6		1.02	10.38	21.22
	11.3	2000	54	380	21.5	133.3	160	2800	100	40.2		0.32	8	21
1802.5A	11.6	1500	74	380	21.6	100	211	2200	121	44	77	1.03	10.95	22.57
	13	1700	73	380	22.6	113.3	197	2500	118.9	50.4		0.28	8	20.3
	14.7	2000	70	380	27.4	133.3	160	2800	120	54.7		0.59	6.2	13.26
1803A	13.2	1500	84	380	25.1	100	216	2200	153	59.4	82	0.69	8.47	17.73
	15	1700	84	380	28.2	113.3	218	2500	150.5	65.5		0.26	8.1	20.6
	17.2	2000	82	380	32.1	133.3	159	2800	157.2	74.8		0.43	5.08	10.54
1803.5A	14.5	1500	92	380	27.4	100	208	2200	170.4	60.9	91	0.53	6.95	14.81
	16.4	1700	92	380	30.7	113.3	186.9	2500	179	73.1		0.44	5.84	12.62
	19.3	2000	92	380	35.4	133.3	159	2800	175	83.3		0.34	4.26	9.1
1804A	17	1500	108	380	31.3	100	216	2200	199.7	69.2	108	0.49	6.53	13.97
	18.7	1700	105	380	36.2	113.3	181.3	2500	216.3	86.8		0.37	4.77	10.47
	21.8	2000	104	380	40.5	133.3	159	2800	213.4	99.6		0.28	3.73	7.71
1804.5A	18.1	1500	115	380	33	100	216	2200	219.2	74.4	116	0.48	5.9	13.02
	19.9	1700	112	380	35.9	113.3	191	2500	236.8	95.2		0.35	4.76	10.22
	23.5	2000	112	380	44.3	133.3	155	2800	243	108.3		0.24	3.11	6.75
1805A	20.4	1500	130	380	37.1	100	213	2200	244.3	80.6	133	0.37	5.16	11.5
	23	1700	129	380	42.8	113.3	186	2500	266.4	106.9		0.28	3.93	8.61
	26.8	2000	128	380	51.7	133.3	159	2800	244.6	107.9		0.21	1.31	2.79
1805.5A	22.3	1500	142	380	41.8	100	205	2200	272.9	93.2	141	0.3	4.31	9.45
	25.6	1700	144	380	45.8	113.3	187.8	2500	275.3	102.6		0.28	3.81	8.27
	28.7	2000	137	380	52.2	133.3	159	2800	272	125.2		0.19	3	7.8
1806A	24.5	1500	156	380	45.3	100	208.5	2200	282	92.4	156	0.28	4.01	9.19
	27.8	1700	156	380	49.9	113.3	190	2500	296.5	114.8		0.24	3.55	7.71
	32.5	2000	155	380	59.7	133.3	160	2800	306	141.7		0.16	2.7	7.1
1806.5A	25.9	1500	165	380	47.7	100	208	2200	311	102.4	164	0.25	3.81	8.43
	28.8	1700	162	380	50.3	113.3	190	2500	342.5	126.5		0.22	3.2	6.96
	33.3	2000	159	380	62.2	133.3	151	2800	327	145.2		0.14	2.4	4.7
1807A	28.3	1500	180	380	56	100	205	2200	322	106.6	179	0.22	3.4	7.4
	31.3	1700	176	380	57.5	113.3	189	2500	365.7	129.3		0.18	2.8	6.1
	36.4	2000	174	380	67.4	133.3	155	2800	348	157		0.13	2.05	4.45
1807.5A	29.8	1500	190	380	59.2	100	200	2200	369.7	124.6	191	0.19	3.01	6.51
	33.5	1700	188	380	59.6	113.3	188.6	2500	373.9	136.5		0.18	2.74	5.94
	38.7	2000	185	380	74.8	133.3	157	2800	354	156.7		0.13	1.98	4.24
1808A	32.2	1500	205	380	57.4	100	213	2200	389.5	128.3	209	0.09	3.6	9.4
	36.5	1700	205	380	66.4	113.3	190	2500	384.9	134.8		0.07	2.9	7.6
	40.8	2000	195	380	72.9	133.3	151	2800	363	158.1		0.17	1.78	3.9

ZE18-X series Servo Motor Model and Specification

Product Series	Rated Power (kW)	Rated Speed (rpm)	Rated Torque (N.m)	Rated Voltage (V)	Rated Current (A)	Frequency (HZ)	Counter Electromotive Force (V/**rpm)	Max Speed (rpm)	Max Torque (N.m)	Max Current (A)	Rotor inertia (kgcm^2)	Line Resistance (Ω)	Line Inductance Ld (mH)	Line Inductance Lq (mH)
1802X	7.1	1500	45	380	13.6	100	312	2200	88	28	62	1.531	10.5	20.7
	8	1700	45	380	15.1	113.3	318	2500	89	33		1.272	9.21	18.73
	9.4	2000	45	380	16.6	133.33	332	2600	88	34.5		0.981	6.72	13.26
1802.5X	10.2	1500	65	380	19.1	100	321	2200	104	32.5	73	1.098	9.32	18.32
	11.5	1700	65	380	21.3	113.3	321	2500	104	37.5		0.917	7.72	15.21
	13.6	2000	65	380	24.8	133.33	327	2600	104	44.5		0.623	5.43	10.73
1803X	13.2	1500	84	380	24.6	100	327	2200	145	45	87	0.805	7.75	15.33
	15	1700	84	380	28.3	113.3	318	2500	147	54		0.608	5.75	11.15
	17.4	2000	82	380	31.6	133.33	327	2600	145	62		0.457	4.31	8.65
1804X	17	1500	108	380	31.8	100	327	2200	195	63	112	0.533	5.95	11.65
	18.7	1700	105	380	35.3	113.3	318	2500	202	74		0.391	4.15	8.3
	21.8	2000	104	380	38.3	133.33	332	2600	194	80		0.305	3.45	6.8
1805X	20.4	1500	130	380	39.2	100	312	2200	248	83	137	0.358	4.12	8.54
	23	1700	129	380	44.8	113.3	309	2500	247	89		0.281	3.11	6.25
	26.8	2000	128	380	51.3	133.33	312	2600	248	110		0.205	2.35	4.75
1806X	24.5	1500	156	380	44.7	100	327	2200	300	104	160	0.311	3.83	7.56
	27.8	1700	156	380	53.3	113.3	318	2500	302	110		0.223	2.85	5.62
	32.5	2000	155	380	60.9	133.33	312	2600	310	140		0.161	1.97	4.02
1807X	28.3	1500	180	380	52	100	327	2200	360	130	187	0.261	3.35	6.75
	31.3	1700	176	380	61.5	113.3	309	2500	370	138		0.181	2.31	4.56
	36.4	2000	174	380	66.8	133.33	327	2600	360	154		0.148	1.85	3.75
1808X	32.2	1500	205	380	61.8	100	312	2200	420	140	213	0.201	2.55	5.05
	36.5	1700	205	380	70	113.3	318	2500	425	157		0.158	2.06	4.12
	40.8	2000	195	380	74	133.33	332	2600	400	185		0.131	1.65	3.52

ZE18 series **Servo Motor** outline drawing and dimension table

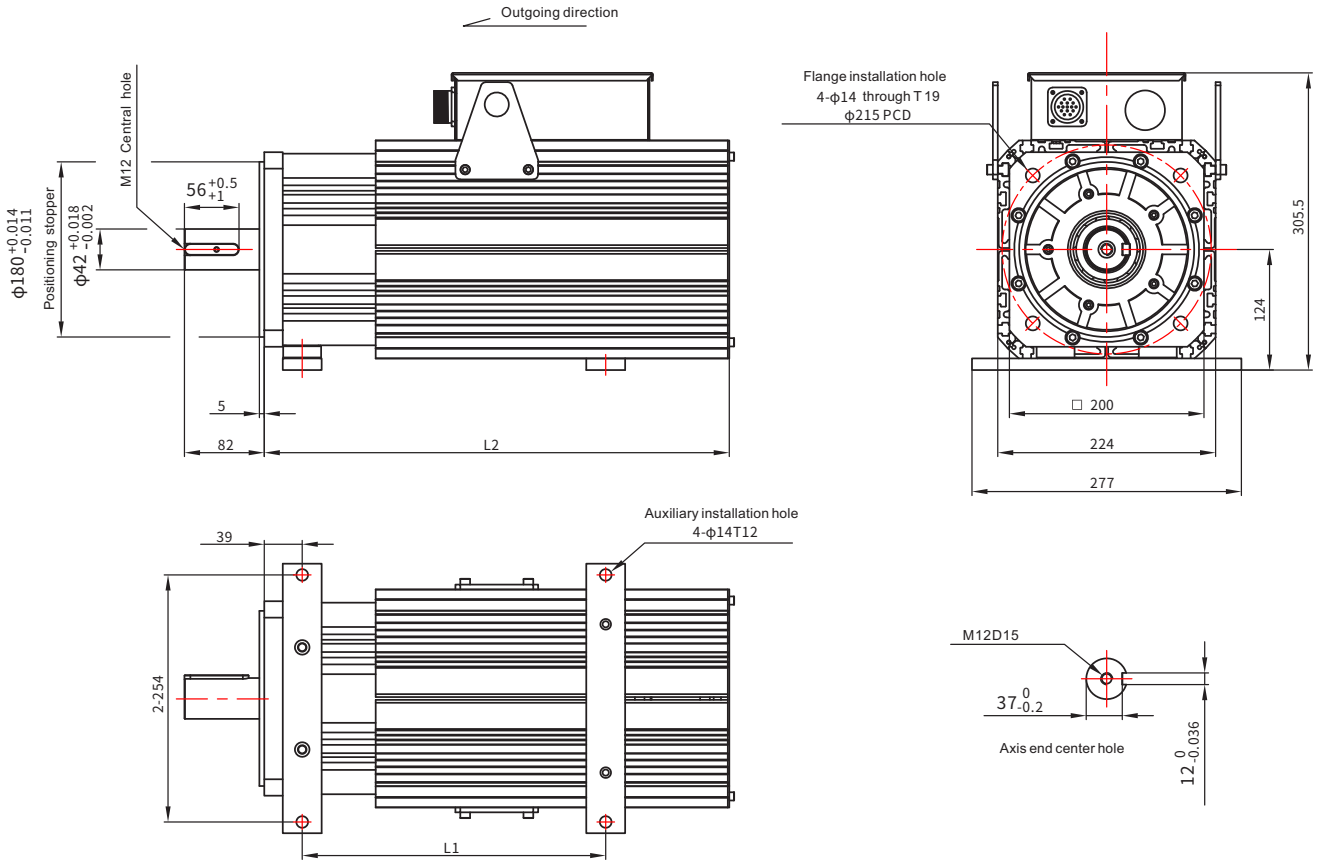

Normal ZE	1802A 1802X	1802.5A/1803A 1802.5X/1803X	1803.5A/1804A 1804X	1804.5A/1805A 1805X	1805.5A/1806A 1806X	1806.5A/1807A 1807X	1807.5A/1808A 1808X
L1（mm）	190	240	240	312	312	312	396
L2（mm）	334	370	406	442	478	514	550

ZE25 series **Servo Motor** Model and Specification

Product Series	Rated Power (kW)	Rated Speed (rpm)	Rated Torque (N.m)	Rated Voltage (V)	Rated Current (A)	Frequency (HZ)	Counter Electromotive Force (V/**rpm)	Max Speed (rpm)	Max Torque (N.m)	Max Current (A)	Rotor inertia (kgcm^2)	Line Resistance (Ω)	Line Inductance Ld (mH)	Line Inductance Lq (mH)
2502.5X	29	1500	185	380	55.5	100	315	2200	290	94	320	0.181	3.62	7.25
	32	1700	180	380	61.4	113.3	310	2500	290	110		0.1379	2.77	5.5
	36.8	2000	176	380	68.7	133.33	313	2600	290	123		0.1014	2.02	4.02
2503X	33.8	1500	215	380	63	100	328	2200	355	118	380	0.158	3.31	6.61
	38.8	1700	218	380	74	113.3	318	2500	360	131		0.117	2.35	4.9
	43.4	2000	207	380	81.5	133.33	312	2600	365	160		0.0832	1.71	3.41
2503.5X	39.2	1500	250	380	73.3	100	328	2200	400	130	440	0.126	2.84	5.68
	44	1700	247	380	83.5	113.3	312	2500	410	150		0.0899	1.97	3.95
	50.8	2000	243	380	91.6	133.33	328	2600	400	170		0.0708	1.61	3.2
2504X	45.9	1500	292	380	87	100	312	2200	500	160	500	0.102	2.11	4.25
	50.2	1700	282	380	95	113.3	318	2500	500	187		0.0852	1.65	3.35
	58.6	2000	280	380	104	133.33	333	2600	490	205		0.0631	1.45	2.9
2504.5X	53.4	1500	340	380	100	100	316	2200	520	170	560	0.0844	2.05	4.1
	59.8	1700	336	380	110	113.3	318	2500	520	195		0.0667	1.62	3.24
	69.1	2000	330	380	125	133.33	328	2600	520	210		0.0508	1.24	2.5
2505X	58.1	1500	370	380	110	100	312	2200	605	200	630	0.0741	1.81	3.62
	64.6	1700	363	380	126	113.3	310	2500	605	225		0.0562	1.32	2.65
	75.4	2000	360	380	143	133.33	312	2600	605	255		0.0409	1.01	2.02
2505.5X	63.6	1500	405	380	115	100	343	2200	590	190	690	0.0774	1.98	3.95
	71.2	1700	400	380	128	113.3	314	2500	595	210		0.059	1.5	3
	82	2000	392	380	140	133.33	343	2500	595	243		0.0448	1.1	2.08
2506X	67.4	1500	429	380	126	100	328	2200	670	220	720	0.0669	1.65	3.3
	76	1700	427	380	146	113.3	318	2500	675	255		0.0481	1.11	2.35
	88.6	2000	423	380	167	133.33	312	2600	680	300		0.0339	0.83	1.63
2507X	77.3	1500	492	380	146	100	328	2200	780	270	815	0.0551	1.41	2.85
	86.3	1700	485	380	168	113.3	310	2500	790	300		0.0382	1.01	2.02
	101	2000	482	380	181	133.33	328	2600	780	338		0.0311	0.77	1.52
2508X	85.6	1500	545	380	166	100	312	2200	910	310	905	0.0419	1.13	2.25
	96.1	1700	540	380	183	113.3	318	2500	910	343		0.0351	0.91	1.81
	111	2000	530	380	203	133.33	333	2600	900	380		0.0269	0.67	1.35

ZE25 series Servo Motor outline drawing and dimension table

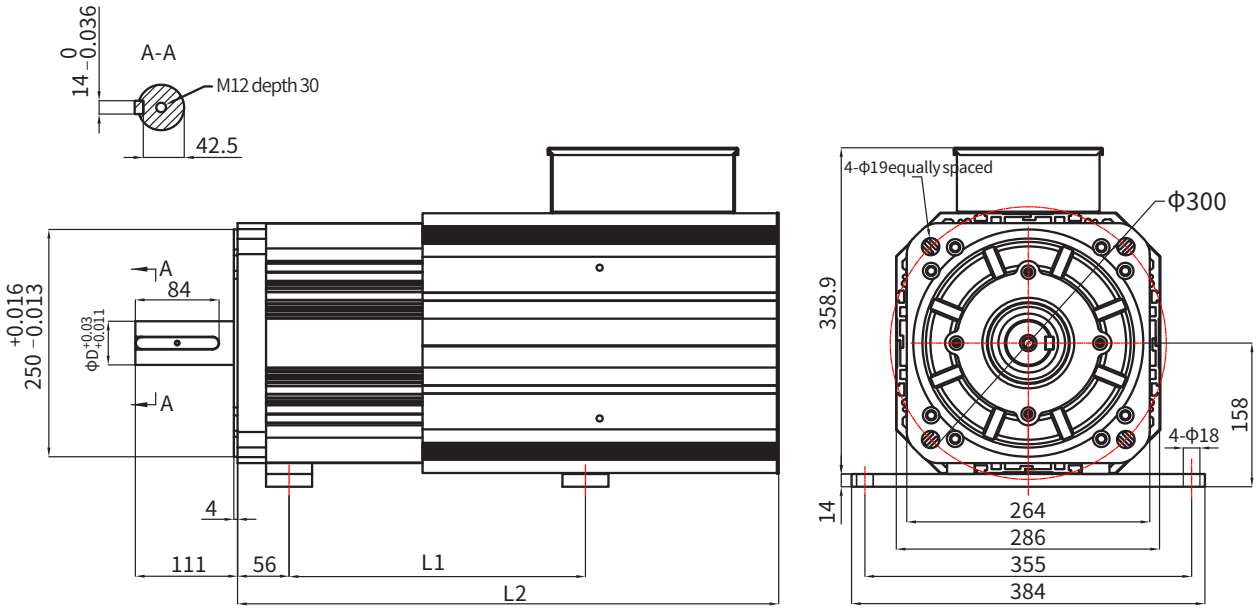

Normal ZE	2502.5X/2503X	2503.5X/2504X	2504.5X	2505X	2505.5X	2506X	2507X	2508X
L1（mm）	322	322	322	322	322	362	402	482
L2（mm）	510	550	590	630	630	670	710	790
ϕD（mm）	48	48	48	60	60	60	60	60

MZ800P Series Servo Drive

Name Rule

MZ800 P S 5R5 I - ★★

logo	Serial Number
MZ800	Servo Drive

logo	Product Category
P	pulse type

logo	Product Category
S	220V

logo	1R6	2R8	5R5	7R6	8R4
Rated output current	1.6A	2.8A	5.5A	7.6A	8.4A

logo	Insallation method
I	Substrate Mounting (Standard)

logo	Non-standard specifications
vacancy	Standard machine

Product Characteristic

Type	Series	Characteristic
Servo drive	MZ800P	**Quickly**
		0 1.2kHz Corresponding bandwidth of speed loop
		Convenient
		0 Wiring is simple and convenient 0 Eliminate limit and origin 0 One-touch adjustment 0 asy to replace encoder battery
		Precise
		0 The encoder resolution reaches 17/23bit
		Strong adaptability to the environment
		0 The motor reaches a higher waterproof level 0 Safe and reliable to use 0 Wiring is simple and convenient

Servo System Wiring connection

Circuit breaker for wiring
Used to protect the power line and cut off the circuit if over current.

Noise filter
Install a noise filter to prevent external noise.

Electromagnetic contactor
Turns on/off servo power .
Please install a surge suppressor.

Electromagnetic contactor
Use external resistor,remove the B2 and B3 tabs, connect the braking resistor between B1+ and B2;use an internal braking,short circuit B2 and B3.

Brake power
24Vdc voltage source, used as the motor has a hol brake.

Electromagnetic contactor
Brake control signal, turn on/off brake power.Install a surge suppressor.

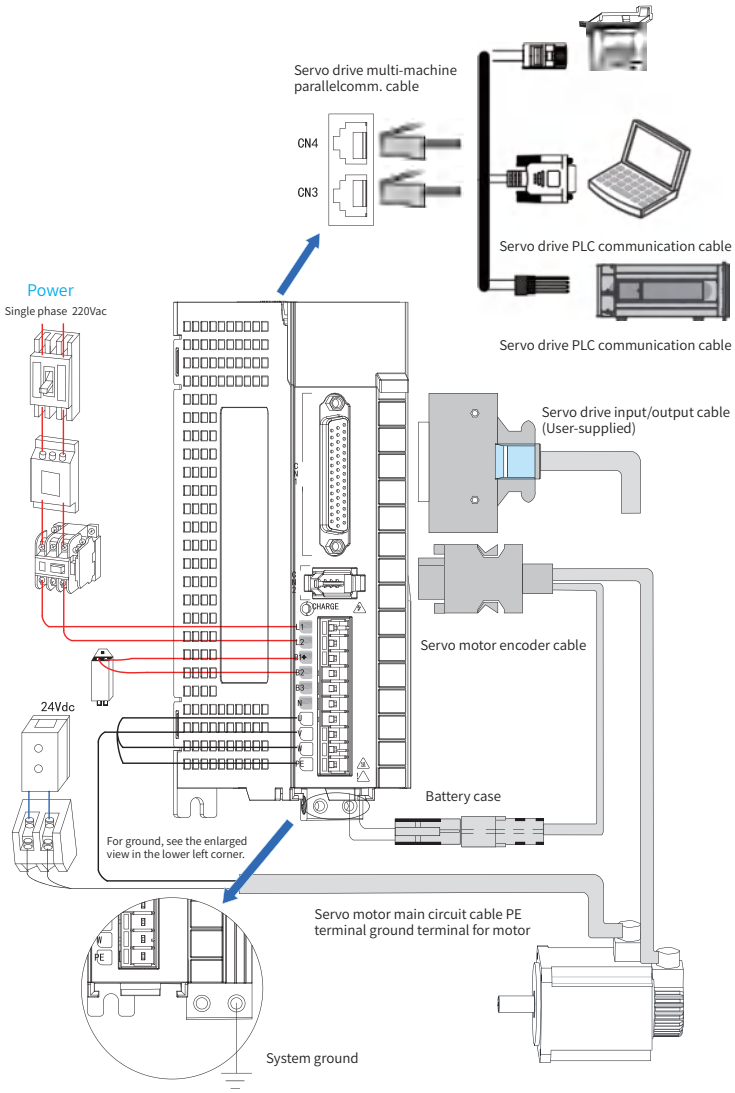

Please pay attention to the power supply capacity when connecting external control power supply or 24Vdc power supply, especially when supplying power to several drives or multiple brakes at the same time, insufficient power supply capacity will lead to insufficient supply current and failure of the drive or the brake. The braking power supply is a 24V DC voltage source. The power should refer to the motor model and meet the braking power requirements.

System wiring precautions:
1. When connecting an external braking resistor, please remove the short-circuit wire between terminals B2 and B3 of the servo drive before connecting. Pay attention to modify the internal parameters.
2. CN3 and CN4 define exactly the same communication interface for the two pins, which can be used arbitrarily between the two.
3. In single-phase 220V wiring, the main circuit terminals are L1 and L2, and the reserved terminals should not be connected.

Servo drive specifications

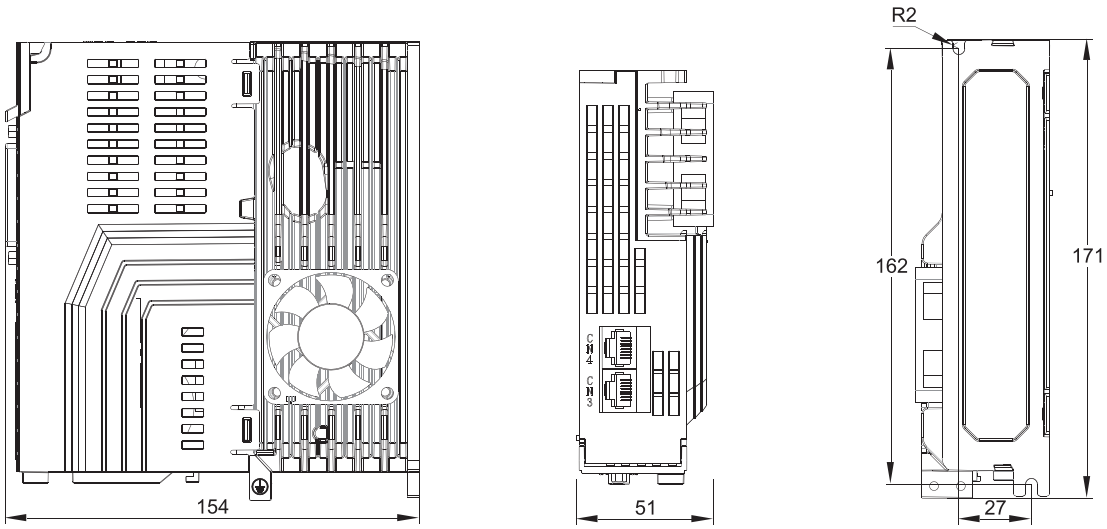

Item				Specifications				
Model Type MZ800PS □□□ I				1R6	2R8	5R5	7R6	8R4
Rated output current				1.6A	2.8A	5.5A	7.6A	8.4A
outlook	A(mm)			27				
	B(mm)			162				
	W(mm)			154				
	H(mm)			171				
	D(mm)			51				
	R(mm)			2				
	Weight(kg)			0.9				
	Input Power			Single phase AC200V-240V，-15% ～ 10%，50/60Hz				
Basic information	Environment	Temp °C	Use environment temperature	0~+55°C (decrease if the ambient temperature is between 40°C and 50°C)				
			Storage environment temperature	-20 ～ 65°C				
		Humidity	Use environment humidity	20~85% RH below(No condensation)				
			Storage environment humidity	20~85% RH below(No condensation)				
		Use and preserve ambient air		indoor(no sunshine)、No corrosive gas, flammable gas, oil mist, dust				
		altitude		Below 1000m				
		vibration		5.8m/s2(0.6G)below 10~60Hz(Can not be used continuously at resonance frequency)				
	Insulation withstand voltage			Basic-FG between AC1500V 1min				
	Control way			IGBT PWM control, sine wave current drive mode				
	Encoder feedback			17bit、 23bit (after adding a battery, it can be used as a multi-turn absolute encoder)				
	Control signal	Input		6 inputs (DC24V optocoupler isolation) switch according to the control mode function				
		Output		3 output (DC24V optocoupler isolation, open collector output) switch according to the control mode function				
	Pulse signal	Input		2 inputs (optocoupler isolation, RS-422 differential, open collector output)				
		Output		1 outputs (Z phase open collector output)				
	Comm. function	RS232		For PC communication (for "Servostudio" connection)				
		RS-485		For upper remote control communication (1:n)				
	Regeneration function			Optional regenerative resistor, external regenerative resistor. Pay attention to modify internal parameters				
	Control model			6 control modes: speed control, position control, torque control, torque/speed control, speed/position control, torque/position, torque/speed/position hybrid control				

Servo drive specifications

Item				Specifications
Function	Control input			Alarm reset, proportional action switching, zero fixed function enable, forward drive prohibited, reverse drive prohibited, external torque limit for forward rotation, external torque limit for reverse rotation, forward jog, reverse jog, forward Reset switch, reverse reset switch, origin switch, emergency stop, servo enable, gain switch
	Control output			Servo ready, motor rotating, zero speed signal, speed reached, position reached, positioning approach signal, torque limit, speed limit, brake output, warning, servo failure, alarm code (3-digit output)
	Position control	Pulse input	Maximum command pulse frequency	Differential input: high-speed maximum 4Mpps, pulse width cannot be less than 0.125μs The maximum low speed is 500Kpps, and the pulse width cannot be less than 1μs Open collector: maximum 200Kpps, pulse width cannot be less than 2.5μs
			Input pulse signal form	Differential input; open collector
			Input pulse signal method	Differential input; open collector
			Command pulse division/ multiplication (Electronic gearratio setting)	1~8388608/1~8388608
			Command filter	Smoothing filter, FIR filter
	Speed control	Control input		Servo ON, alarm reset, speed command reverse, zero speed clamp, internal command selection input 1, internal command selection input 2, internal command selection input 3, internal command selection input 4, forward rotation external torque limit input, reverse rotation External torque limit input, emergency stop
		Control output		Alarm status, servo preparation, brake release, torque limit output, speed limit output speed reached, speed consistent, motor rotation output, zero-speed signal output
	Torque Control	Control input		Servo ON, alarm reset, torque command reverse, zero speed clamp
		Control output		Alarm status, servo preparation, brake release, torque limit, speed limit output, emergency stop
		Torque command input		(Factory default setting, the range can be set by function code)
		Speed limit function		Positive and negative internal speed limit P03.27, P03.28
	Common	Speed observer function		YES
		Damping control function		YES
		Adaptive notch filter		YES
		Automatic adjustment function		YES
		Encoder output frequency division		YES
		Internal location planning function		YES
		Adjustment/ function setting		Use the host computer setting software "Servo studio" to adjust
		Protection		Over voltage, abnormal power supply, over current, overload, abnormal encoder, over speed, excessive position deviation, abnormal parameters, etc.

Braking resistor related specifications

Model Type		Built-in braking resistor specifications		Min. Allowed Resistance (Ω)	Max. Braking Energy Absorbed by Capacitor (J)
		Resistance (Ω)	Power(W)		
Single phase 220V	1R6	-	-	50	9
	2R8	-	-	45	18
	5R5	50	50	40	26
	7R6、8R4	50	50	40	26

Note: ■ 1R6 and 2R8 models have no built-in braking resistor. If you need to use them, please configure the external braking resistor by yourself. Please consult our technical support for the power selection of the external braking resistor.

MZ860 Series Servo Drive

Name Rule

MZ860 P S 5R5 I - ★★

logo	Serial Number
MZ860	Servo Drive

logo	Product Category
P	pulse type
C	CANopen bus type
N	EtherCAT bus type

logo	Product Category
S	220V

logo	1R6	2R8	5R5	7R6
Rated output current	1.6A	2.8A	5.5A	7.6A
	012	015	018	
	12A	15A	18A	

logo	Insallation method
I	Substrate Mounting (Standard)

logo	Non-standard specifications
vacancy	Standard machine

Product Characteristic

Type	Series	Characteristic
Servo drive	MZ860	**Quickly**
		0 1.2kHZ Corresponding bandwidth of speed loop
		Convenient
		0 Wiring is simple and convenient 0 One-touch adjustment 0 Eliminate limit and origin 0 Easy to replace encoder battery
		Precise
		0 The encoder resolution reaches 17/23bit
		Strong adaptability to the environment
		0 Meet safety standards 0 The motor reaches a higher waterproof level 0 Safe and reliable to use，Wiring is simple and convenient

Servo System Wiring connection

Circuit breaker for wiring
Used to protect the power line and cut off the circuit if over current.

Noise filter
Install a noise filter to prevent external noise.

Electromagnetic contactor
Turns on/off servo power .
Please install a surge suppressor.

Electromagnetic contactor
Use external resistor,remove the B2 and B3 tabs, connect the braking resistor between B1+ and B2;use an internal braking,short circuit B2 and B3.

Brake power
24Vdc voltage source, used as the motor has a hol brake.

Electromagnetic contactor
Brake control signal, turn on/off brake power.Install a surge suppressor.

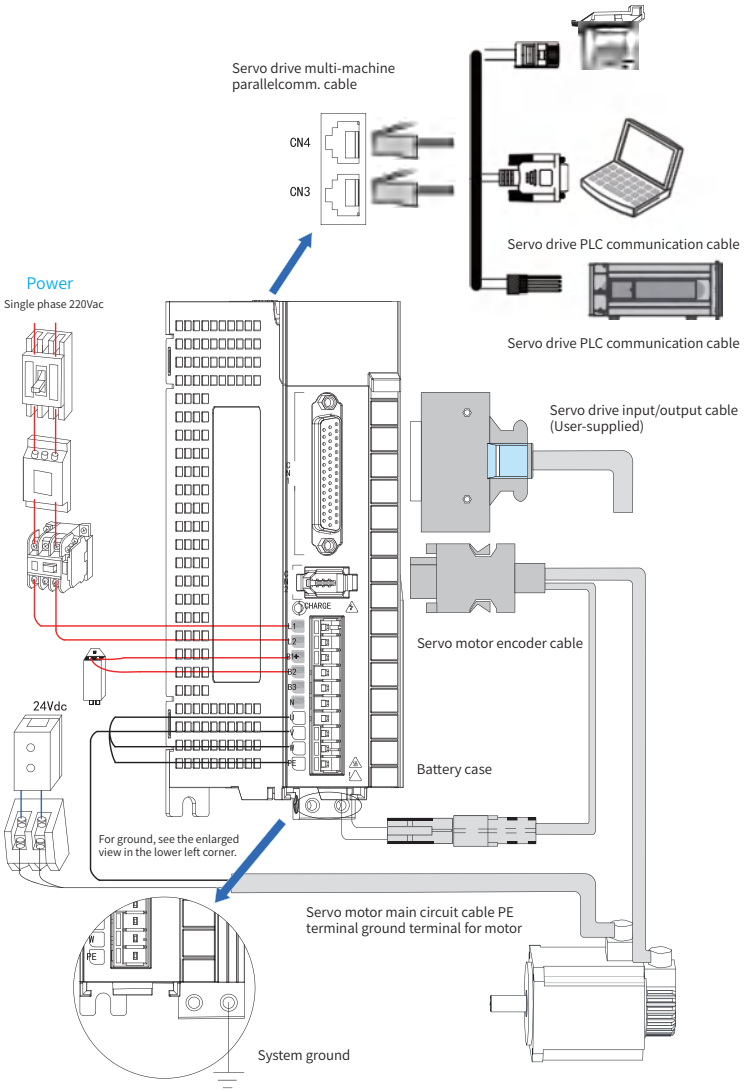

Please pay attention to the power supply capacity when connecting external control power supply or 24Vdc power supply, especially when supplying power to several drives or multiple brakes at the same time, insufficient power supply capacity will lead to insufficient supply current and failure of the drive or the brake. The braking power supply is a 24V DC voltage source. The power should refer to the motor model and meet the braking power requirements.

System wiring precautions:
1. When connecting an external braking resistor, please remove the short-circuit wire between terminals B2 and B3 of the servo drive before connecting. Pay attention to modify the internal parameters.
2. CN3 and CN4 define exactly the same communication interface for the two pins, which can be used arbitrarily between the two.
3. In single-phase 220V wiring, the main circuit terminals are L1 and L2, and the reserved terminals should not be connected.

MZ860 Series Servo Drive

Servo drive specifications

Item				Specifications						
Model Type MZ860P □□□□ I				S1R6	S2R8	S5R5	S7R6	S012	S015	S018
Rated output current				1.6A	2.8A	5.5A	7.6A	12A	15A	18A
outlook	A(mm)			27				52		
	B(mm)			162				185		
	W(mm)			154				177		
	H(mm)			171				196		
	D(mm)			51				66		
	R(mm)			2				3		
	Weight(kg)			0.9				1.5		
	Input Power (-15%~10%,50/60Hz)			Single phase AC200V-240V				Three phase AC200V-240V		
Basic information	Environment	Temp °C	Use environment temperature	0~+55°C (decrease if the ambient temperature is between 40°C and 50°C)						
			Storage environment temperature	-20~65°C						
		Humidity	Use environment humidity	20~85% RH below(No condensation)						
			Storage environment humidity	20~85% RH below(No condensation)						
		Use and preserve ambient air		indoor(no sunshine)、No corrosive gas, flammable gas, oil mist, dust						
		altitude		Below 1000m						
		vibration		5.8m/s2(0.6G)below 10~60Hz(Can not be used continuously at resonance frequency)						
	Insulation withstand voltage			Basic-FG between AC1500V 1min						
	Control way			IGBT PWM control, sine wave current drive mode						
	Encoder feedback			17bit、 23bit (after adding a battery, it can be used as a multi-turn absolute encoder)						
	Control signal	Input		9 inputs (DC24V optocoupler isolation) switch according to the control mode function						
		Output		5 output (DC24V optocoupler isolation, open collector output) switch according to the control mode function						
	Pulse signal	Input		2 inputs (optocoupler isolation, RS-422 differential, open collector output)						
		Output		4 outputs (A/B/Z phase RS-422 differential; Z phase open collector output)						
	Comm. function	RS232		For PC communication (for "Servostudio" connection)						
		RS-485		For upper remote control communication (1:n)						
		CAN		CANOPEN bus communication						
	Regeneration function			Optional regenerative resistor, external regenerative resistor. Pay attention to modify internal parameters						
	Control model			6 control modes: speed control, position control, torque control, torque/speed control, speed/position control, torque/position, torque/speed/position hybrid control						

Item				Specifications
Function	Control input			Alarm reset, proportional action switching, zero fixed function enable, forward drive prohibited, reverse drive prohibited, external torque limit for forward rotation, external torque limit for reverse rotation, forward jog, reverse jog, forward Reset switch, reverse reset switch, origin switch, emergency stop, servo enable, gain switch.
	Control output			Servo ready, motor rotating, zero speed signal, speed reached, position reached, positioning approach signal, torque limit, speed limit, brake output, warning, servo failure, alarm code (3-digit output)
	Position control	Pulse input	Maximum command pulse frequency	The maximum low speed is 500Kpps, and the pulse width cannot be less than 1μs Open collector: maximum 200Kpps, pulse width cannot be less than 2.5μs
			Input pulse signal form	Differential input; open collector
			Input pulse signal method	Pulse + direction, right angle phase difference (A phase + B phase), CW + CCW pulse
			Command pulse division/ multiplication (Electronic gearratio setting)	1~8388608/1~8388608
			Command filter	Smoothing filter, FIR filter
		Pulse output	Output pulse form	Phase A, Phase B: Differential output Z phase: differential output or open collector output
			Frequency division ratio	Arbitrary frequency division
			Output pulse function	Encoder position pulse and position pulse command (can be set)
	Speed control	Control input		Servo ON, alarm reset, speed command reverse, zero speed clamp, internal command selection input 1, internal command selection input 2, internal command selection input 3, internal command selection input 4, forward rotation external torque limit input, reverse rotation External torque limit input, emergency stop
		Control output		Alarm status, servo preparation, brake release, torque limit output, speed limit output speed reached, speed consistent, motor rotation output, zero-speed signal output
	Torque Control	Control input		Servo ON, alarm reset, torque command reverse, zero speed clamp
		Control output		Alarm status, servo preparation, brake release, torque limit, speed limit output, emergency stop
		Torque command input		(Factory default setting, the range can be set by function code)
		Speed limit function		Positive and negative internal speed limit P03.27, P03.28
	Common	Speed observer function		YES
		Damping control function		YES
		Adaptive notch filter		YES
		Automatic adjustment function		YES
		Encoder output frequency division		YES
		Internal location planning function		YES
		Adjustment/ function setting		Use the host computer setting software "Servo studio" to adjust
		Protection		Over voltage, abnormal power supply, over current, overload, abnormal encoder, over speed, excessive position deviation, abnormal parameters, etc.

MZ860 Series Servo Drive

The name of each part of the drive

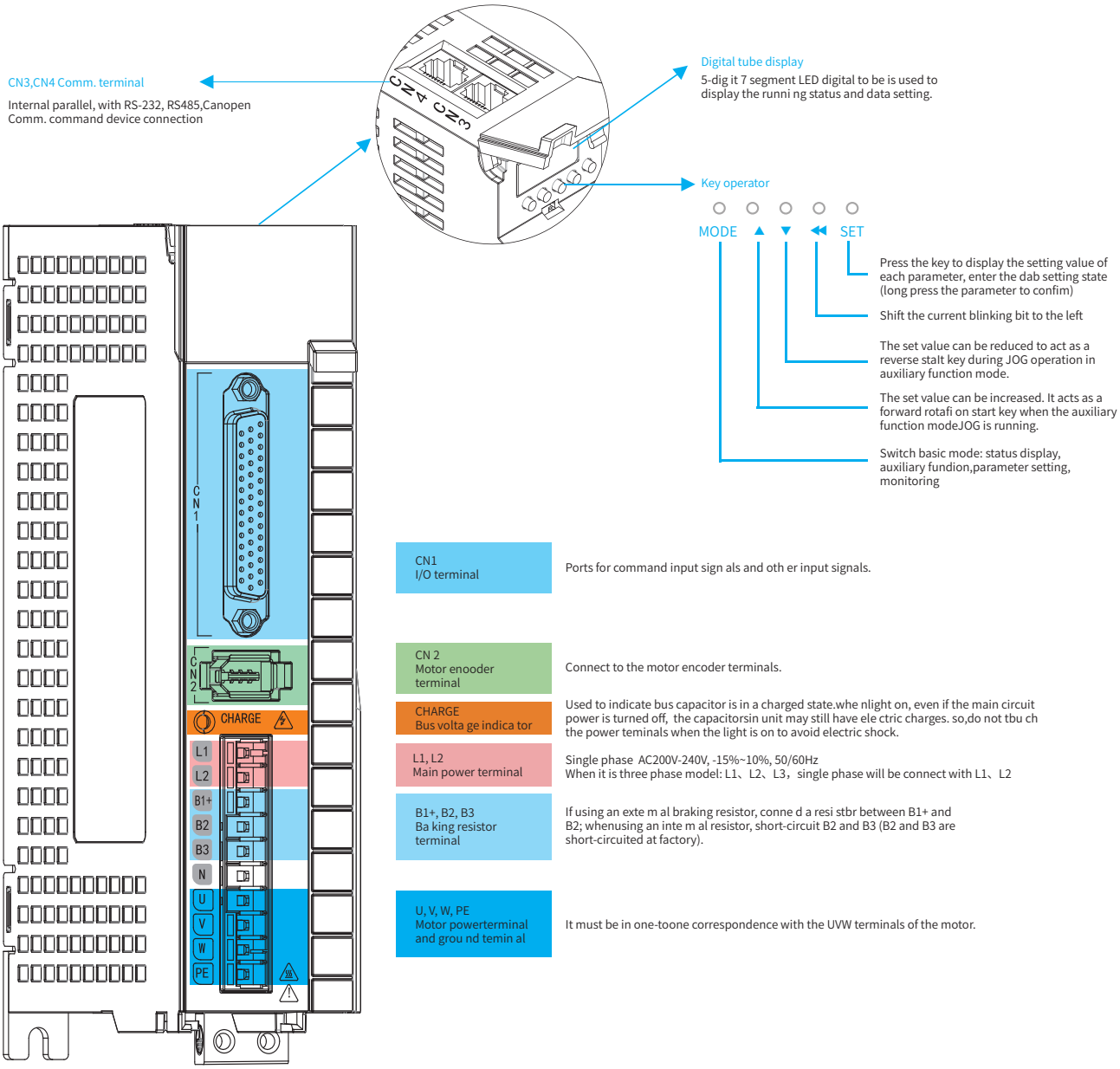

Braking resistor related specifications

Model Type		Built-in braking resistor specifications		Min. Allowed Resistance (Ω)	Max. Braking Energy Absorbed by Capacitor (J)
		Resistance (Ω)	Power(W)		
Single phase 220V	S1R6	-	-	50	9
	S2R8	-	-	45	18
	S5R5	50	50	40	26
	S7R6	50	50	40	26
Three phase 220V	S012	30	100	25	47
	S015	30	100	25	47
	S018	30	100	25	55

Note: ■ S1R6 and S2R8 models have no built-in braking resistor. If you need to use them, please configure the external braking resistor by yourself. Please consult our technical support for the power selection of the external braking resistor.

Servo drive installation dimensions

MZ860(single phase 220V)(Unit:mm)

MZ860PS1R6I
MZ860PS2R8I
MZ860PS5R5I
MZ860PS7R6I

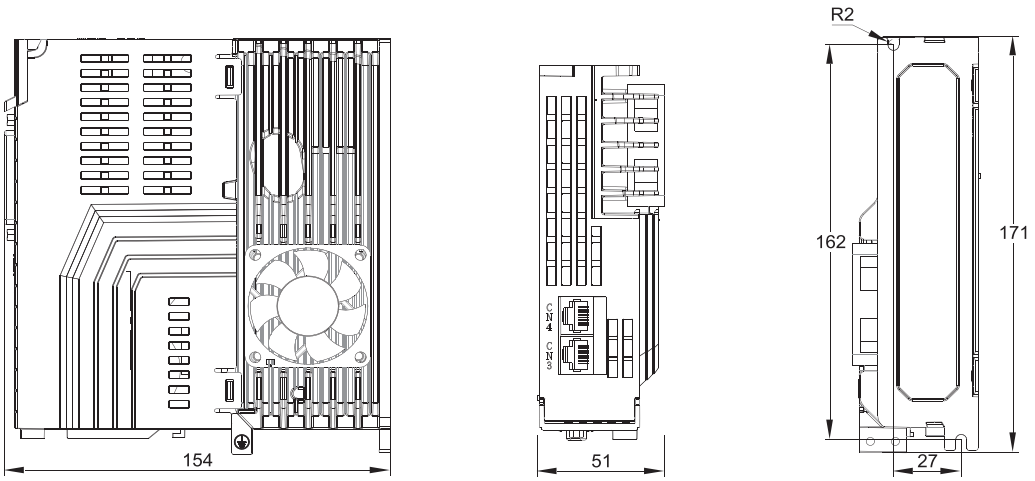

MZ860(three phase 220V) (Unit:mm)

MZ860PS012I
MZ860PS015I
MZ860PS018I

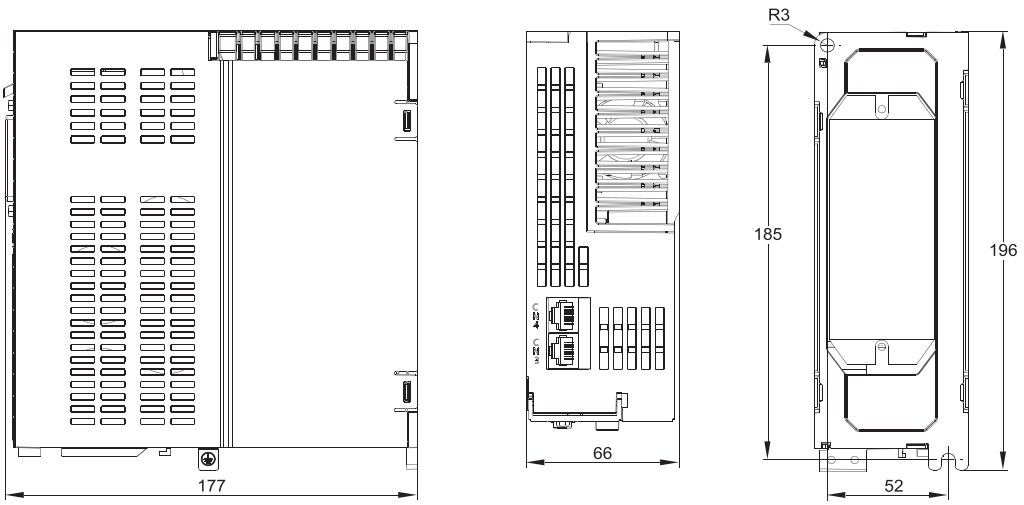

MZ870 Series Servo Drive

Name Rule

MZ870	A	P	S	5R5	I	-	★★
①	②	③	④	⑤	⑥		⑦

① Product series MZ870 Series Servo Drive	④ Voltage level A：110V S：220V T：380V	⑤ Rated output current ■ A:110V S:220V 1R6：1.6A 7R6：7.6A 2R8：2.8A 012：12.0A 5R5：5.5A 018：18.0A - - - - - - - - - - - - - - ■ T：380V 3R5：3.5A 5R4：5.4A 8R4：8.4A 012：12.0A
② Subdivision series A/B/E	⑥ Installation Method I：Substrate Installation	
③ Product Categories P：Pulse type C：CANopen Bus Type	⑦ Model Description Marking: Non-standard specification Vacancy: Standard machine	

Product Characteristic

Type	Series	Characteristic
Servo drive	MZ870	**Versatility**
		0 It supports multiple control modes (such as position control, speed control, torque control, etc.) and can be adapted to different application requirements through parameter settings.
		Convenient
		0 Wiring is simple and convenient 0 One-touch adjustment 0 Eliminate limit and origin 0 Easy to replace encoder battery
		Precise
		0 The encoder resolution reaches 23bit
		Strong adaptability to the environment
		0 Meet safety standards 0 The motor reaches a higher waterproof level 0 Safe and reliable to use，Wiring is simple and convenient

Servo System Wiring connection

Circuit breaker for wiring
Used to protect the power line and cut off the circuit if over current.

Noise filter
Install a noise filter to prevent external noise.

Electromagnetic contactor
Turns on/off servo power .
Please install a surge suppressor.

Electromagnetic contactor
Use external resistor,remove the B2 and B3 tabs, connect the braking resistor between B1+ and B2;use an internal braking,short circuit B2 and B3.

Brake power
24Vdc voltage source, used as the motor has a hol brake.

Electromagnetic contactor
Brake control signal, turn on/off brake power.Install a surge suppressor.

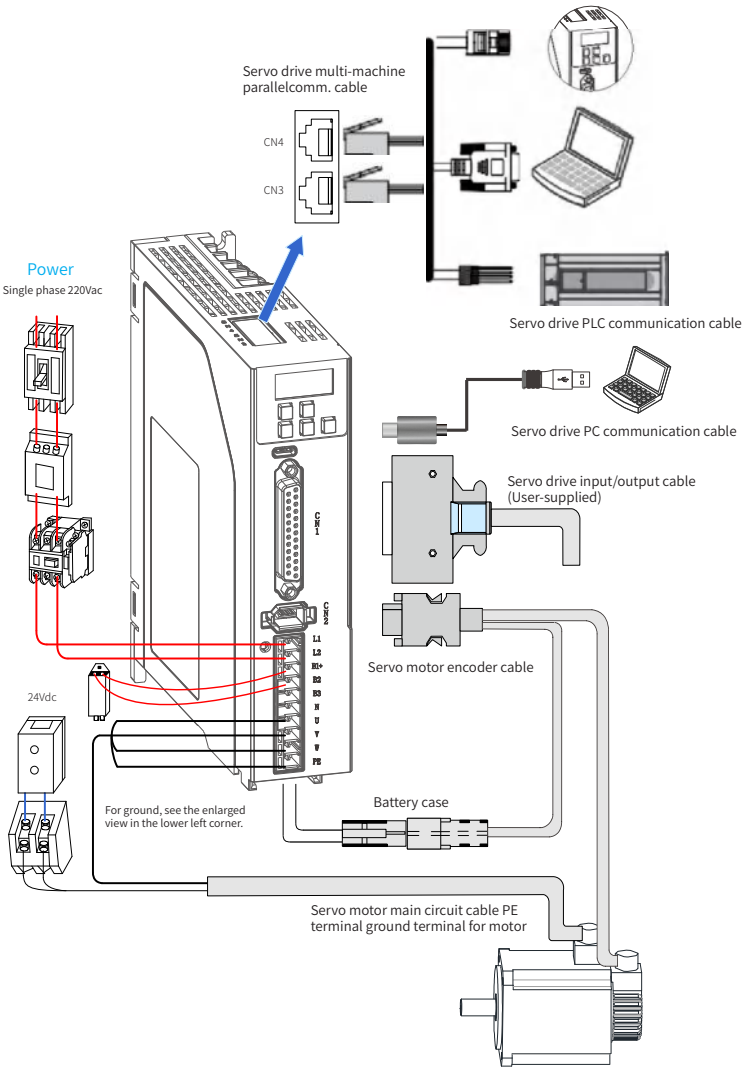

Please pay attention to the power supply capacity when connecting external control power supply or 24Vdc power supply, especially when supplying power to several drives or multiple brakes at the same time, insufficient power supply capacity will lead to insufficient supply current and failure of the drive or the brake. The braking power supply is a 24V DC voltage source. The power should refer to the motor model and meet the braking power requirements.

System wiring precautions:
1. When connecting an external braking resistor, please remove the short-circuit wire between terminals B2 and B3 of the servo drive before connecting. Pay attention to modify the internal parameters.
2. CN3 and CN4 define exactly the same communication interface for the two pins, which can be used arbitrarily between the two.
3. In single-phase 220V wiring, the main circuit terminals are L1 and L2, and the reserved terminals should not be connected.

MZ870 Series Servo Drive

Servo drive specifications

Item			SIZE A		SIZE B		SIZE C					
Model Type			S1R6	S2R8	S5R5	S7R6	S012	S018	T3R5	T5R4	T8R4	T012
Rated output current			1.6A	2.8A	5.5A	7.6A	12A	18A	3.5A	5.4A	8.4A	12A
Outlook	A(mm)		27		37		52					
	B(mm)		162		162		185					
	W(mm)		156		156		177					
	H(mm)		171		171		196					
	D(mm)		40		50		66					
	R(mm)		2.3		2.3		2.9					
	Weight(kg)		0.8		0.9		1.5					
	Input Power(-15%~10%，50/60Hz)		Single phase AC200V-240V				Three phase AC200V-240V		Three phaseAC380V-440V			
Basic information	Environment	Use /Storage environment temperature	0°C ~+55°C (decrease if the ambient temperature is between 40°C and 50°C)/-20°C ~70°C									
		Use /Storage environment humidity	90%RH below(No condensation)									
		Use and preserve ambient air	indoor(no sunshine)、No corrosive gas, flammable gas, oil mist, dust									
		Altitude	Below 1000m									
		Vibration	5.8m/s^2（0.6G）below 10~60Hz(Can not be used continuously at resonance frequency)									
	Insulation withstand voltage		Basic-FG between AC1500V 1min									
	Control way		IGBT PWM control, sine wave current drive mode									
	Encoder feedback		17bit、 23bit (after adding a battery, it can be used as a multi-turn absolute encoder)									
	Control signal	Input	Up to 9-channel input (DC24V optically isolated) with function switching based on control mode.									
		Output	Up to 5-channel output (DC24V optically isolated, collector open-drain output) is functionally switched according to the control mode.									
	Pulse signal	Input	2 inputs (optocoupler isolation, RS-422 differential, open collector output)									
		Output	A:4 outputs (A/B/Z phase RS-422 differential; Z phase open collector output) B 、E: 1 outputs (Z phase open collector output)									
	Comm. function	USB	For PC communication (for 「Servostudio」 connection)									
		RS-485	For upper remote control communication (1:n)									
		CAN	CANOPEN bus communication									
	Regeneration function		Optional regenerative resistor, external regenerative resistor. Pay attention to modify internal parameters									
	Control model		6 control modes: speed control, position control, torque control, torque/speed control, speed/position control,torque/position,torque/speed/position hybrid control									

Item				Specifications
Function	Control input			Alarm reset, proportional action switching, zero fixed function enable, forward drive prohibited, reverse drive prohibited, external torque limit for forward rotation, external torque limit for reverse rotation, forward jog, reverse jog, forward Reset switch, reverse reset switch, origin switch, emergency stop, servo enable, gain switch.
	Control output			Servo ready, motor rotating, zero speed signal, speed reached, position reached, positioning approach signal, torque limit, speed limit, brake output, warning, servo failure, alarm code (3-digit output)
	Position control	Pulse inpu	Maximum command pulse frequency	The maximum low speed is 500Kpps, and the pulse width cannot be less than 1μs Open collector: maximum 200Kpps, pulse width cannot be less than 2.5μs
			Input pulse signal form	Differential input; open collector
			Input pulse signal method	Pulse + direction, right angle phase difference (A phase + B phase), CW + CCW pulse
			Command pulse division/ multiplication (Electronic gearratio setting)	1~8388608/1~8388608
			Command filter	Smoothing filter, FIR filter
		Pulse output	Output pulse form	Phase A, Phase B: Differential output Z phase: differential output or open collector output
			Frequency division ratio	Arbitrary frequency division
			Output pulse function	Encoder position pulse and position pulse command(can be set)
	Speed control	Control input		Servo ON, alarm reset, speed command reverse, zero speed clamp, internal command selection input 1, internal command selection input 2, internal command selection input 3, internal command selection input 4, forward rotation external torque limit input, reverse rotation External torque limit input, emergency stop
		Control output		Alarm status, servo preparation, brake release, torque limit output, speed limit output speed reached, speed consistent, motor rotation output, zero-speed signal output
	Torque control	Control input		Servo ON, alarm reset, torque command reverse, zero speed clamp
		Control output		Alarm status, servo preparation, brake release, torque limit, speed limit output, emergency stop
		Torque command input		(Factory default setting, the range can be set by function code)
		Speed limit function		Positive and negative internal speed limit P03.27, P03.28
	Common	Dynamic braking function		Only A model 220V includes this function
		Speed observer function		YES
		Damping control function		YES
		Adaptive notch filter		YES
		Automatic adjustment function		YES
		Encoder output frequency division		YES
		Internal location planning function		YES
		Adjustment/ function setting		Use the host computer setting software「Servostudio」to adjust
		Protection		Over voltage, abnormal power supply, over current, overload, abnormal encoder, over speed, excessive position deviation, abnormal parameters, etc.

MZ870 Series Servo Drive

Servo drive installation dimensions

SIZE-A
(S:Single phase220V)

MZ870APS1R6I
MZ870APS2R8I
MZ870BPS1R6I
MZ870BPS2R8I
MZ870EPS1R6I
MZ870EPS2R8I

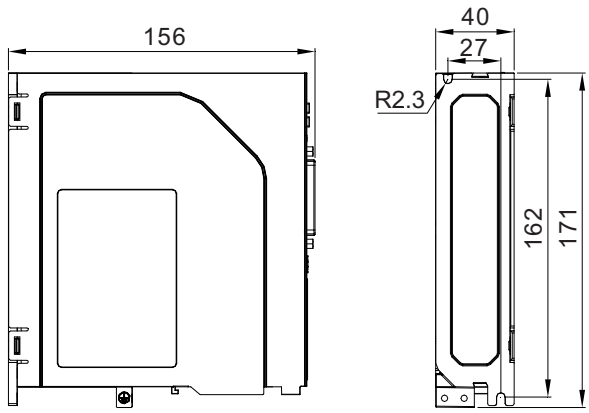

SIZE-B
(S:Single phase 220V)

MZ870APS5R5I
MZ870APS7R6I
MZ870BPS5R5I
MZ870BPS7R6I
MZ870EPS5R5I
MZ870EPS7R6I

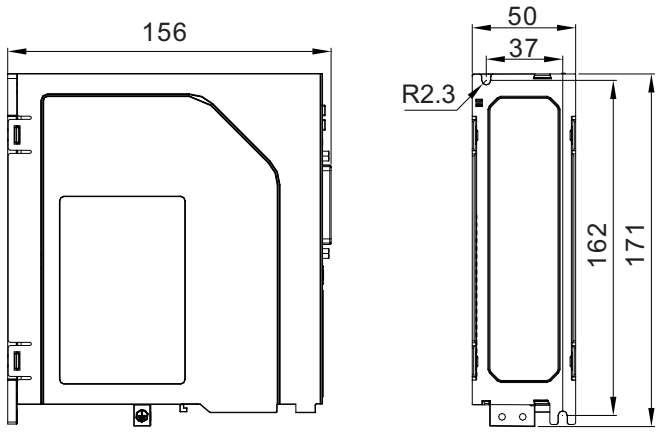

SIZE-C
(A: Three phase 110V
S: Three phase 220V
T: Three phase 380V)

MZ870APS012I
MZ870APS018I
MZ870APT3R5I
MZ870APT5R4I
MZ870APT8R4I
MZ870APT012I
MZ870BPS012I
MZ870BPS018I

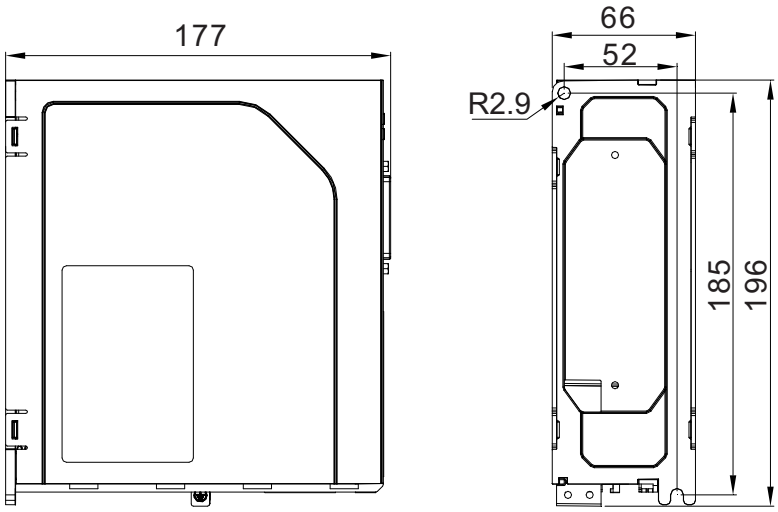

MZ870N Series Servo Drive

Name Rule

MZ870	A	N	S	5R5	I	-	★★
①	②	③	④	⑤	⑥		⑦

① Product series MZ870 Series Servo Drive	④ Voltage level S：220V　T：380V	⑤ Rated output current S：220V 1R6:1.6A 2R8：2.8A 5R5：5.5A 7R6：7.6A 012：12.0A 018：18.0A T：380V —
② Subdivision series A/B	⑥ Installation Method I：Substrate Installation	
③ Product Category N：EtherCAT Bus Type	⑦ Model Description Marking: Non-standard specification Vacancy: Standard machine	

Product Characteristic

Type	Series	Characteristic
Servo drive	MZ870N	**Quickly**
		0 1.2kHZ Corresponding bandwidth of speed loop
		Versatility
		0 It supports multiple control modes, dynamic braking function (220V), and has STO function, meeting different application requirements.
		Convenient
		0 Wiring is simple and convenient　0 One-touch adjustment 0 Eliminate limit and origin　0 Easy to replace encoder battery
		Precise
		0 The encoder resolution reaches 23bit
		Strong adaptability to the environment
		0 Meet safety standards 0 The motor reaches a higher waterproof level 0 Safe and reliable to use，Wiring is simple and convenient

Servo drive specifications

Item			SIZE A		SIZE B		SIZE C					
Model Type			S1R6	S2R8	S5R5	S7R6	S012	S018	T3R5	T5R4	T8R4	T012
Rated output current			1.6A	2.8A	5.5A	7.6A	12A	18A	3.5A	5.4A	8.4A	12A
Outlook	A(mm)		27		37		52					
	B(mm)		162		162		185					
	W(mm)		154		154		175					
	H(mm)		171		171		196					
	D(mm)		40		50		66					
	R(mm)		2.3		2.3		2.9					
	Weight(kg)		0.8		0.9		1.5					
	Input Power(-15%~10%，50/60Hz)		Single phase AC200V-240V		Three phase AC200V-240V		Three phase AC380V-440V					
Basic information	Control mode		IGBT PWM control, sinusoidal current drive mode									
	Encoder feedback		17-bit and 23-bit bus-type absolute encoders									
	Conditions of Use	Operating / Storage Temperature	0 ~ +55°C (When the ambient temperature is between 45°C and 55°C , the average load rate should not exceed 80%.) (Non-freezing) / -20°C ~ +70°C									
		Operating / Storage Humidity	Below 90% RH (no condensation allowed)									
		Vibration resistance / Impact strength	$4.9m/s^2$ / $19.6m/s^2$									
		Degree of protection	IP20									
		Altitude	Below 1,000 meters									
		Environmental pollution level	PD2									
		Overvoltage level	OVCIII									
EtherCAT Station specifications	EEtherCAT Basic performance of slave station	Communication protocol	EtherCAT Protocol									
		Support services	CoE(PDO、SDO)									
		Synchronous mode	DC - Distributed Clock									
		Physical layer	100BASE-TX									
		Baud rate	100Nbit/s(100Base-TX)									
		Duplex mode	Full duplex									
		Topological structure	Circular, linear									
		Transmission medium	Shielded Cat 5e or better network cable									
		Transmission distance	Less than 100M between two nodes (in a good environment with high-quality cables)									
		Slave station number	The protocol supports up to 65,535 devices, but in actual use, no more than 100 devices are employed.									
		EtherCAT frame length	44 bytes to 1498 bytes									
		Process data	The maximum size of a single Ethernet frame is 1,486 bytes.									
		The synchronization jitter of two stations	<1us									
		Refresh time	Approximately 30 microseconds for 1000 digital input/output signals and about 100 microseconds for 100 servo axes.									
		Communication bit error rate	10^{-10}Ethernet standard									
	EtherCAT configuration unit	FMMU unit	Eight									
		Storage Synchronization Management Unit	Eight									
		Process data RAM	8KB									
		Distributed clock	64-bit									
		EEPROM capacity	32Kbit									
Build-in function	Overtravel (0T) prevention function		Immediately stop when P-0T and N-0T actions occur.									
	Electronic gear ratio		1--8388608/1-8388608									
	Protective function		Overcurrent, overvoltage, undervoltage, overload, abnormal main circuit detection, overheated radiator, missing phase in power supply, overspeed, encoder abnormality,CPU abnormality, parameter abnormality, others									
	LED display function		Main power supply CHARGE, 5-digit LED display									
	Back-end debugging		Type_C									
	Dynamic braking function		Only A model 220V includes this function									
	Others		Gain adjustment, alarm record, J0G operation									

Servo drive installation dimensions

SIZE-A (S:Single phase220V) MZ870ANS1R6I MZ870ANS2R8I MZ870BNS1R6I MZ870BNS2R8I	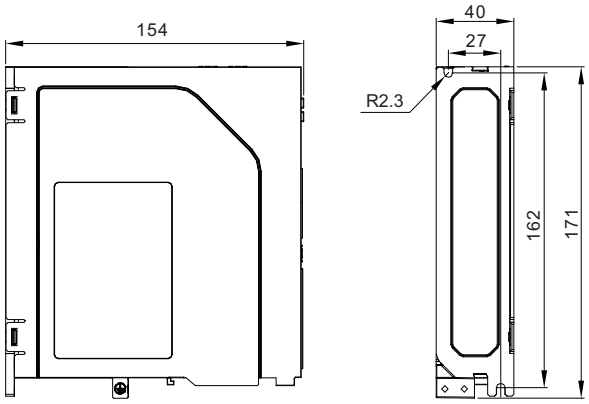
SIZE-B (S:Single phase 220V) MZ870ANS5R5I MZ870ANS7R6I MZ870BNS5R5I MZ870BNS7R6I	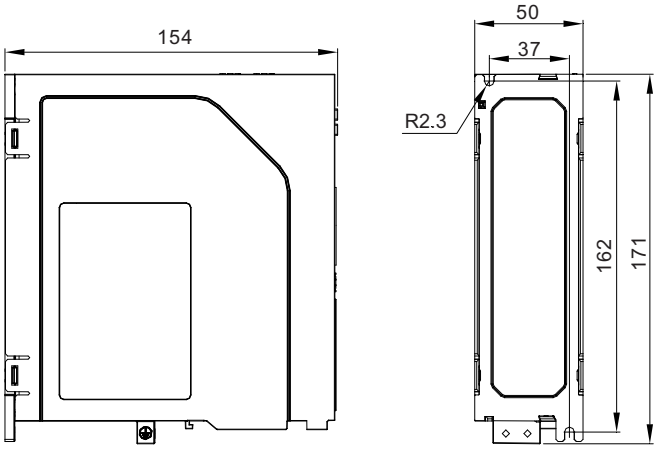
SIZE-C (S:Three phase 220V T:Three phase 380V) MZ870ANS012I MZ870ANS018I MZ870ANT3R5I MZ870ANT5R4I MZ870ANT8R4I MZ870ANT012I MZ870BNS012I MZ870BNS018I MZ870BNT3R5I MZ870BNT5R4I MZ870BNT8R4I MZ870BNT012I	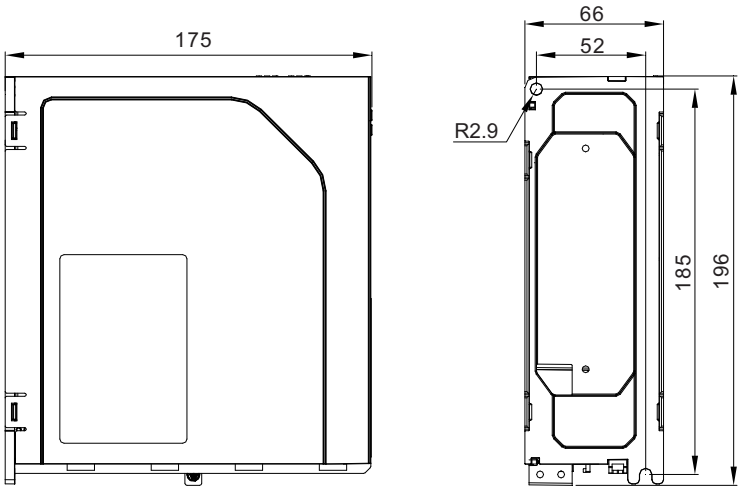

MZ630P Series Servo Drive

Name Rule

MZ630 P S 5R5 I - ★★

logo	Serial Number
MZ630	Servo Drive

logo	Product Category
P	pulse type
N	EtherCAT bus type

logo	Product Category
S	220V
T	380V

logo	1R6	2R8	3R5	...	7R6
Rated output current	1.6A	2.8A	3.5A	...	7.6A

logo	Insallation method
I	Substrate Mounting (Standard)

logo	Non-standard specifications
vacancy	Standard machine

Product Characteristic

Type	Series	Characteristic
Servo drive	MZ630P	**Quickly** 0 3.0kHZ Corresponding bandwidth of speed loop **Convenient** 0 Wiring is simple and convenient 0 Eliminate limit and origin 0 One-touch adjustment 0 Easy to replace encoder battery **Precise** 0 The encoder resolution reaches 17bit **Strong adaptability to the environment** 0 Meet safety standards 0 The motor reaches a higher waterproof level 0 Safe and reliable to use，Wiring is simple and convenient

MZ630P Servo System Wiring connection

Circuit breaker for wiring
Used to protect the power line and cut off the circuit if over current.

Noise filter
Install a noise filter to prevent external noise.

Electromagnetic contactor
Turns on/off servo power .
Please install a surge suppressor.

Electromagnetic contactor
Use external resistor,remove the B2 and B3 tabs, connect the braking resistor between B1+ and B2;use an internal braking,short circuit B2 and B3.

Brake power
24Vdc voltage source, used as the motor has a hol brake.

Electromagnetic contactor
Brake control signal, turn on/off brake power.Install a surge suppressor.

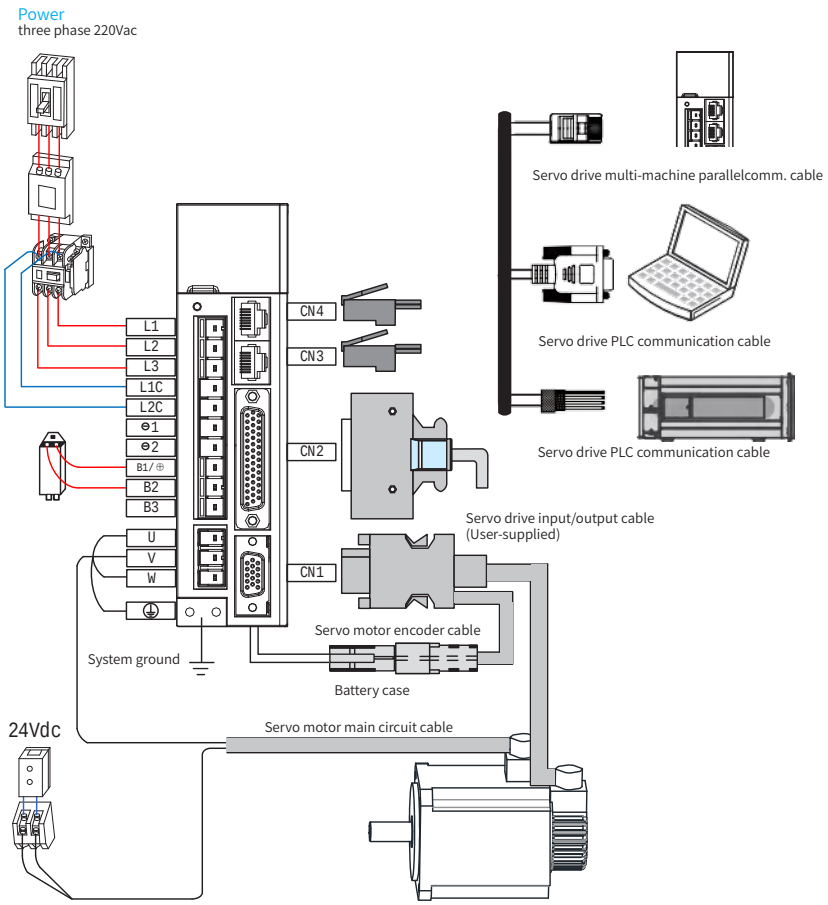

Please pay attention to the power supply capacity when connecting external control power supply or 24Vdc power supply, especially when supplying power to several drives or multiple brakes at the same time, insufficient power supply capacity will lead to insufficient supply current and failure of the drive or the brake. The braking power supply is a 24V DC voltage source. The power should refer to the motor model and meet the braking power requirements.

System wiring precautions:
1. When connecting an external braking resistor, please remove the short-circuit wire between terminals B2 and B3 of the servo drive before connecting. Pay attention to modify the internal parameters.
2. CN3 and CN4 define exactly the same communication interface for the two pins, which can be used arbitrarily between the two.
3. In single-phase 220V wiring, the main circuit terminals are L1 and L2, and the reserved terminals should not be connected.

MZ630P Series Servo Drive

MZ630P Servo drive specifications

Item				Specifications					
Model Type MZ630PS □□□ I				1R6/2R8	5R5	7R6/012/015/018	025/032	045	060/075
Rated output current				1.6A/2.8A	5.5A	7.6A/12A/15A/18A	25A/32A	45A	60A/75A
outlook	A(mm)			32	32	53	88	130	190
	B(mm)			152	152	152	248	352	447
	W(mm)			152	152	190	215	215	215
	H(mm)			160	160	160	258	368	463
	D(mm)			42	56	65	110	206	224
	R(mm)			2.5	2.5	2.5	2.8	3.5	3.5
	Weight(kg)			0.8	1.0	1.5	5.1	8.3	12
	Input Power			Single phase/ three phase		Three phase			
				AC200V-240V,-15% ～ 10%，50/60Hz					
Model Type MZ630PT □□□ I				3R5/5R4	8R4/012/017	021/026/032	037/045	060/075	090/112/140/170/210
Rated output current				3.5A/5.4A	8.4A/12A/17A	21A/26A/32A	37A/45A	60A/75A	90A/112A/140/A170A/210A
outlook	A(mm)			49	70	88	130	190	200
	B(mm)			162	193	248	352	447	614
	W(mm)			177	204	215	215	215	310
	H(mm)			174	203	258	368	463	630
	D(mm)			60	92	110	206	224	278
	R(mm)			2.5	2.8	2.8	3. 5	3.5	4.5
	Weight(kg)			1.3	2.7	5.1	8.3	12	39
	Input Power			Three phase AC380V-440V，-15%~ 10%，50/ 60Hz					
Basic information	Environment	Temp °C	Use environment temperature	0~+55°C (decrease if the ambient temperature is between 40°C and 50°C)					
			Storage environment temperature	-20 ～ 65°C					
		Humidity	Use environment humidity	20~85% RH below(No condensation)					
			Storage environment humidity	20~85% RH below(No condensation)					
		Use and preserve ambient air		indoor(no sunshine)、No corrosive gas, flammable gas, oil mist, dust					
		altitude		Below 1000m					
		vibration		5.8m/s2(0.6G)below 10~60Hz(Can not be used continuously at resonance frequency)					
	Insulation withstand voltage			Basic-FG between AC1500V 1min					
	Control way			IGBT PWM control, sine wave current drive mode					
	Encoder feedback			1: 17bit (after adding a battery, it can be used as a multi-turn absolute encoder) 2: 23bit (after adding a battery, it can be used as a multi-turn absolute encoder) 3: rotary encoder					
	Control signal	Input		9 inputs (DC24V optocoupler isolation) switch according to the control mode function					
		Output		5 output (DC24V optocoupler isolation, open collector output) switch according to the control mode function					
	Pulse signal	Input		2 inputs (optocoupler isolation, RS-422 differential, open collector output)					
		Output		4 outputs (A/B/Z phase RS-422 differential; Z phase open collector output)					
	Comm. function	RS232		For PC communication (for "Servostudio" connection)					
		RS-485		For upper remote control communication (1:n)					
		CAN		CANOPEN bus communication					
	Regeneration function			Optional regenerative resistor, external regenerative resistor. Pay attention to modify internal parameters					
	Control model			6 control modes: speed control, position control, torque control, torque/speed control, speed/position control, torque/position, torque/speed/position hybrid control					

MZ630P Servo drive specifications

Item				Specifications
Function	Control input			Alarm reset, proportional action switching, zero fixed function enable, forward drive prohibited, reverse drive prohibited, external torque limit for forward rotation, external torque limit for reverse rotation, forward jog, reverse jog, forward Reset switch, reverse reset switch, origin switch, emergency stop, servo enable, gain switch
	Control output			Servo ready, motor rotating, zero speed signal, speed reached, position reached, positioning approach signal, torque limit, speed limit, brake output, warning, servo failure, alarm code (3-digit output)
	Position control	Pulse input	Maximum command pulse frequency	Differential input: high-speed maximum 4Mpps, pulse width cannot be less than 0.125μs The maximum low speed is 500Kpps, and the pulse width cannot be less than 1μs Open collector: maximum 200Kpps, pulse width cannot be less than 2.5μs
			Input pulse signal form	Differential input; open collector
			Input pulse signal method	Pulse + direction, right angle phase difference (A phase + B phase), CW + CCW pulse
			Command pulse division/ multiplication (Electronic gear ratio setting)	1~8388608/1~8388608
			Command filter	Smoothing filter, FIR filter
		Pulse output	Output pulse form	Phase A, Phase B: Differential output Z phase: differential output or open collector output
			Frequency division ratio	Arbitrary frequency division
			Output pulse function	Encoder position pulse and position pulse command (can be set)
	Speed control	Control input		Servo ON, alarm reset, speed command reverse, zero speed clamp, internal command selection input 1, internal command selection input 2, internal command selection input 3, internal command selection input 4, forward rotation external torque limit input, reverse rotation External torque limit input, emergency stop
		Control output		Alarm status, servo preparation, brake release, torque limit output, speed limit output speed reached, speed consistent, motor rotation output, zero-speed signal output
	Torque Control	Control input		Servo ON, alarm reset, torque command reverse, zero speed clamp
		Control output		Alarm status, servo preparation, brake release, torque limit, speed limit output, emergency stop
		Torque command input		(Factory default setting, the range can be set by function code)
		Speed limit function		Positive and negative internal speed limit P03.27, P03.28
	Common	Speed observer function		YES
		Damping control function		YES
		Adaptive notch filter		YES
		Automatic adjustment function		YES
		Encoder output frequency division		YES
		Internal location planning function		YES
		Adjustment/ function setting		Use the host computer setting software "Servo studio" to adjust
		Protection		Over voltage, abnormal power supply, over current, overload, abnormal encoder, over speed, excessive position deviation, abnormal parameters, etc.

MZ630P Series Servo Drive

Servo drive installation dimensions

MZ630PS1R6I MZ630PS2R8I	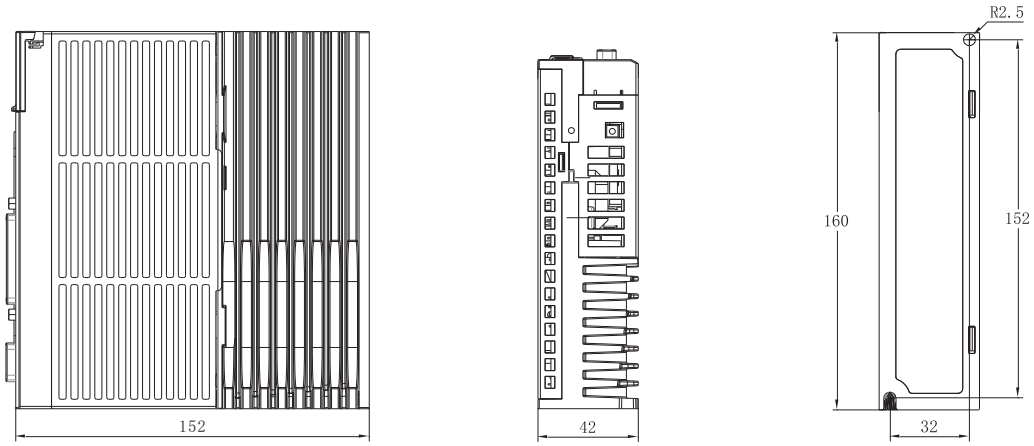
MZ630PS5R5I	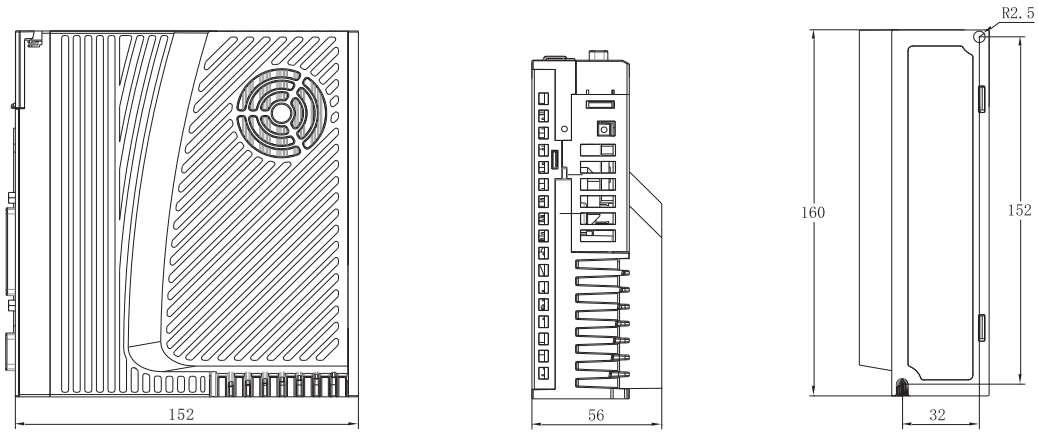
MZ630PS7R6I MZ630PS012I MZ630PS015I MZ630PS018I	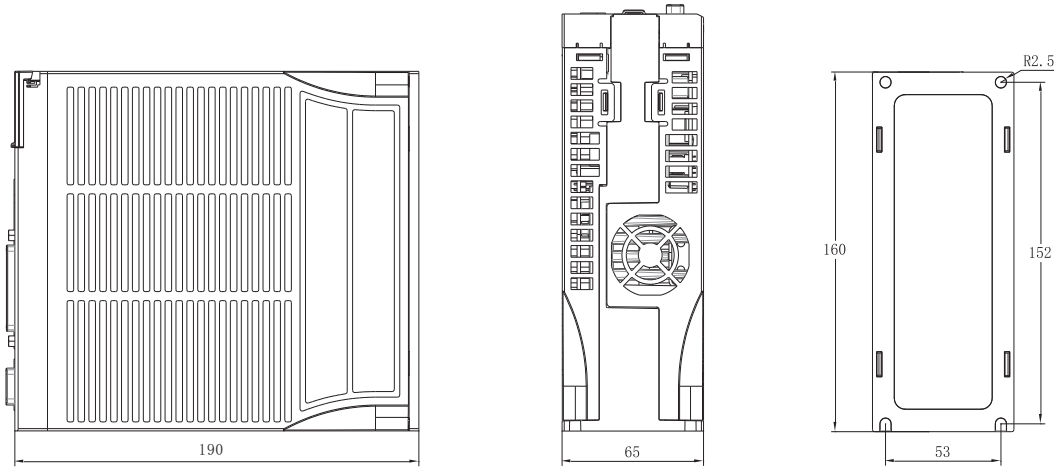

MZ630PT3R5I MZ630PT5R4I	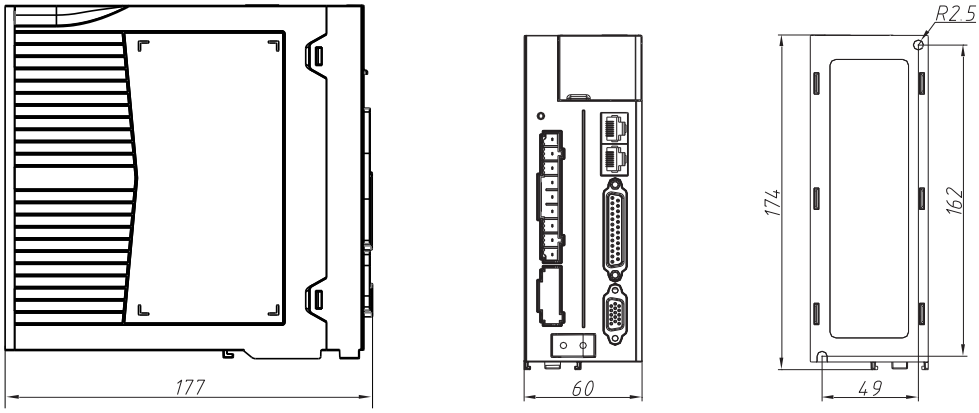
MZ630PT8R4I MZ630PT012I MZ630PT017I	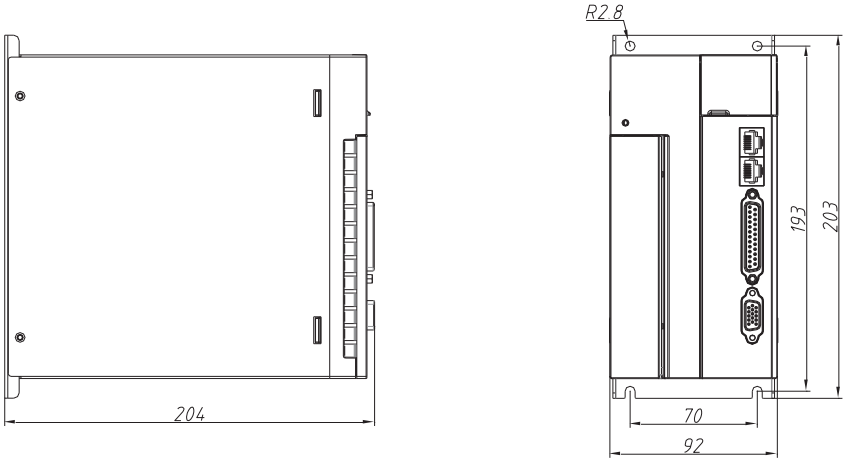
MZ630PS025I MZ630PS032I MZ630PT021I MZ630PT026I MZ630PT032I	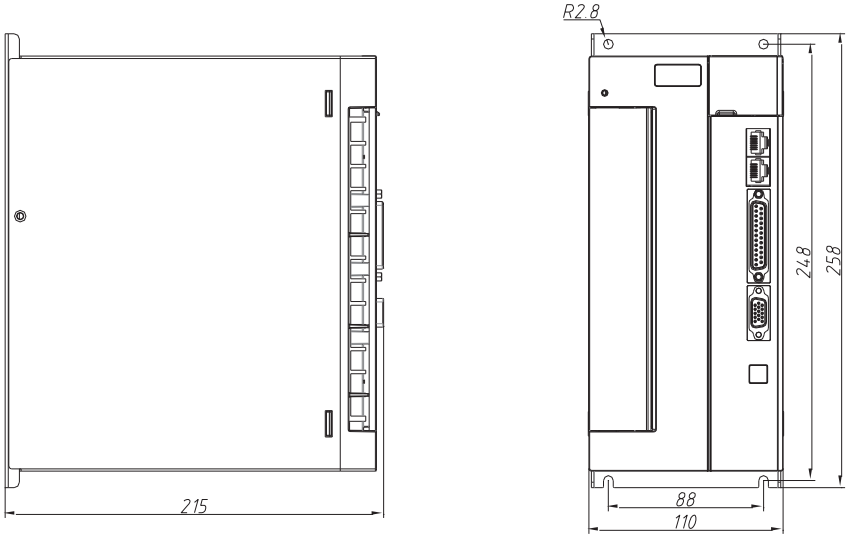

MZ630P Series Servo Drive

Servo drive installation dimensions

MZ630PS045I MZ630PT037I MZ630PT045I	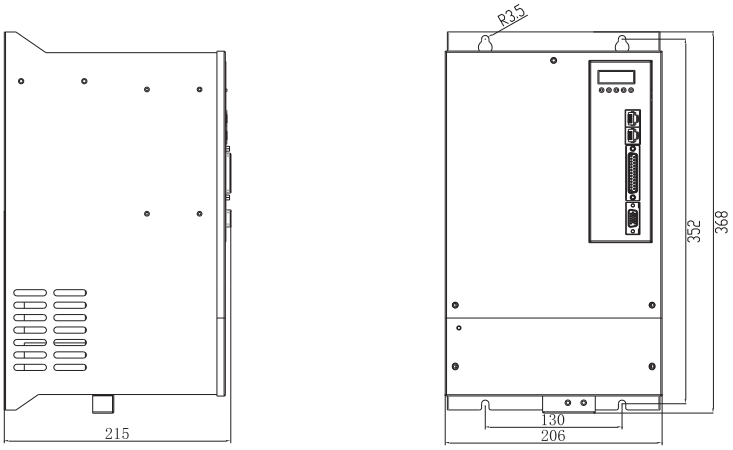
MZ630PS060I MZ630PS075I MZ630PT060I MZ630PT075I	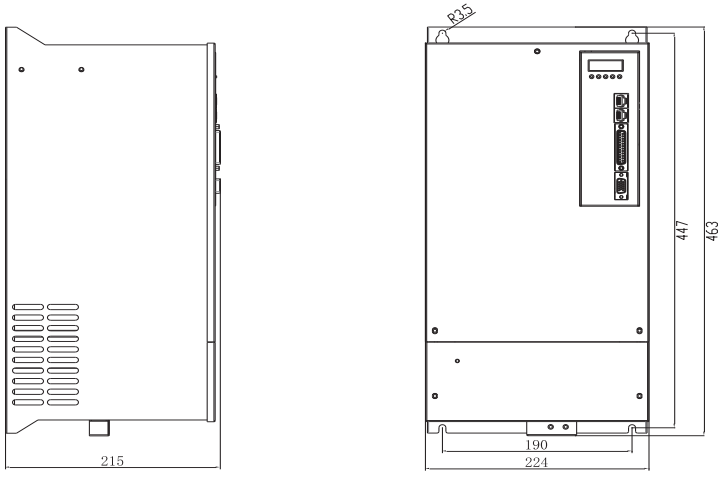
MZ630PT090I MZ630PT112I MZ630PT140I MZ630PT170I MZ630PT210I	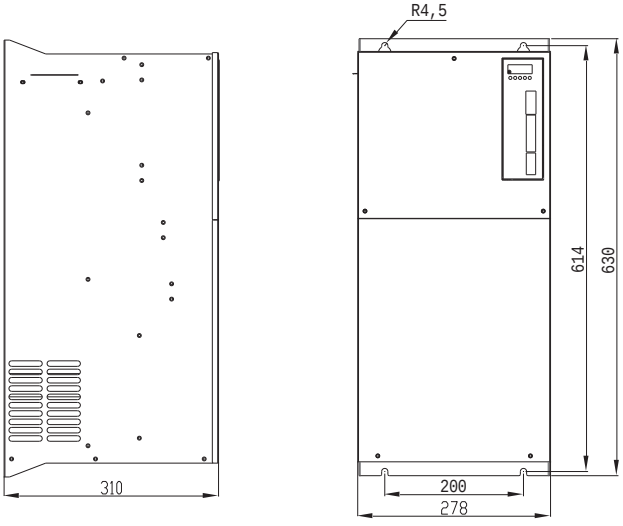

MZ630N Series Servo Drive

Name Rule

MZ630 N S 5R5 I - ★★

logo	Serial Number
MZ630	Servo Drive

logo	Product Category
P	pulse type
N	EtherCAT bus type

logo	Product Category
S	220V
T	380V

logo	1R6	2R8	3R5	5R4	5R5	7R6
Rated output current	1.6A	2.8A	3.5A	5.4A	5.5A	7.6A
	8R4	012	015	017	018	021
	8.4A	12A	15A	17A	18A	21A
	025	026	032	037	045	060
	25A	26A	32A	37A	45A	60A
	075	090	112	140	170	210
	75A	90A	112A	140A	170A	210A

logo	Insallation method
I	Substrate Mounting (Standard)

logo	Non-standard specifications
vacancy	Standard machine

Product Characteristic

Type	Series	Characteristic
Servo drive	MZ630N	**Quickly**
		0 3.0kHZ Corresponding bandwidth of speed loop
		Convenient
		0 Wiring is simple and convenient 0 Eliminate limit and origin 0 One-touch adjustment 0 Easy to replace encoder battery
		Precise
		0 The encoder resolution reaches 17/23bit
		Strong adaptability to the environment
		0 Meet safety standards 0 The motor reaches a higher waterproof level 0 Safe and reliable to use，Wiring is simple and convenient

MZ630N Servo drive specifications

Item			Specifications					
Model Type MZ630NS □□□ I			1R6/2R8	5R5	7R6/012/015/018	025/032	045	060/075
Rated output current			1.6A/2.8A	5.5A	7.6A/12A/15A/18A	25A/32A	45A	60A/75A
	A(mm)		32	32	53	88	130	190
	B(mm)		152	152	152	248	352	447
	W(mm)		152	152	190	215	215	215
	H(mm)		160	160	160	258	368	463
	D(mm)		42	56	65	110	206	224
	R(mm)		2.5	2.5	2.5	2.8	3.5	3.5
	Weight(kg)		0.8	1.0	1.5	5.1	8.3	12
	Input Power		Single phase/ three phase		Three phase			
			AC200V-240V, -15%~ 10%, 50/ 60Hz					
Model Type MZ630NT □□□ I			3R5/5R4	8R4/012/017	021/026/032	037/045	060/075	090/112/140/170/210
Rated output current			3.5A/5.4A	8.4A/12A/17A	21A/26A/32A	37A/45A	60A/75A	90A/112A/140A/170A/210A
	A(mm)		49	70	88	130	190	200
	B(mm)		162	193	248	352	447	614
	W(mm)		177	204	215	215	215	310
	H(mm)		174	203	258	368	463	630
	D(mm)		60	92	110	206	224	278
	R(mm)		2.5	2.8	2.8	3.5	3.5	4.5
	Weight(kg)		1.3	2.7	5.1	8.3	12	39
	Input Power		Three phase AC380V-440V, -15%~ 10%, 50/ 60Hz					
Basic information	Control mode		IGBT PWM control, sine wave current drive mode 220V, 380V: single-phase or three-phase full-wave rectification					
	Encoder feedback		17/23bit bus absolute value encoder					
	Service conditions	Use/storage temperature	0~+45 °C (please derate if the ambient temperature is above 45°C , and the average load rate cannot be higher than 80%)/-40~+70°C					
		Use/storage humidity	90%RH below(No condensation)					
		Vibration/impact resistance	4.9m/s² / 19. 6m/s²					
		Protection level	IP10					
		Altitude	Below 1000m					
		Environmental pollution level	PD2					
		Overvoltage level	OVCIII					
EtherCAT slave specifications	EtherCAT Basic performance of slave station	communication protocol	EtherCAT protocol					
		Support Services	CoE (PDO、SDO)					
		Synchronization mode	DC-Distributed clock					
		Physical layer	100BASE-TX					
		Baud rate	100Mbit/s (100Base-TX)					
		Duplex mode	full duplex					
		Topological structure	Circular, linear					
		Transmission medium	Shielded Cat 5 or better network cable					
		Number of slave stations	The protocol supports up to 65535, and the actual use is not more than 100					
		EtherCAT Frame length	44 bytes~1498 bytes					
		process data	1486 bytes maximum for a single Ethernet frame					
		Synchronous jitter of two slave stations	＜1us					
		Refresh time	1000 switch inputs and outputs about 30us; About 100us for 100 servo axes					
		Communication error rate	10^{-10}Ethernet standard					
	EtherCAT Configuration unit	FMM Uunit	8 个					
		Storage Synchronization Snap-in	8 个					
		Process data RAM	8KB					
		Distributed clock	64-bit					
		EEPROM volume	32Kbit					

MZ630N Servo System Wiring connection

Circuit breaker for wiring
Used to protect the power line and cut off the circuit if over current.

Noise filter
Install a noise filter to prevent external noise.

Electromagnetic contactor
Turns on/off servo power .
Please install a surge suppressor.

Electromagnetic contactor
Use external resistor,remove the B2 and B3 tabs, connect the braking resistor between B1+ and B2;use an internal braking,short circuit B2 and B3.

Brake power
24Vdc voltage source, used as the motor has a hol brake.

Electromagnetic contactor
Brake control signal, turn on/off brake power.Install a surge suppressor.

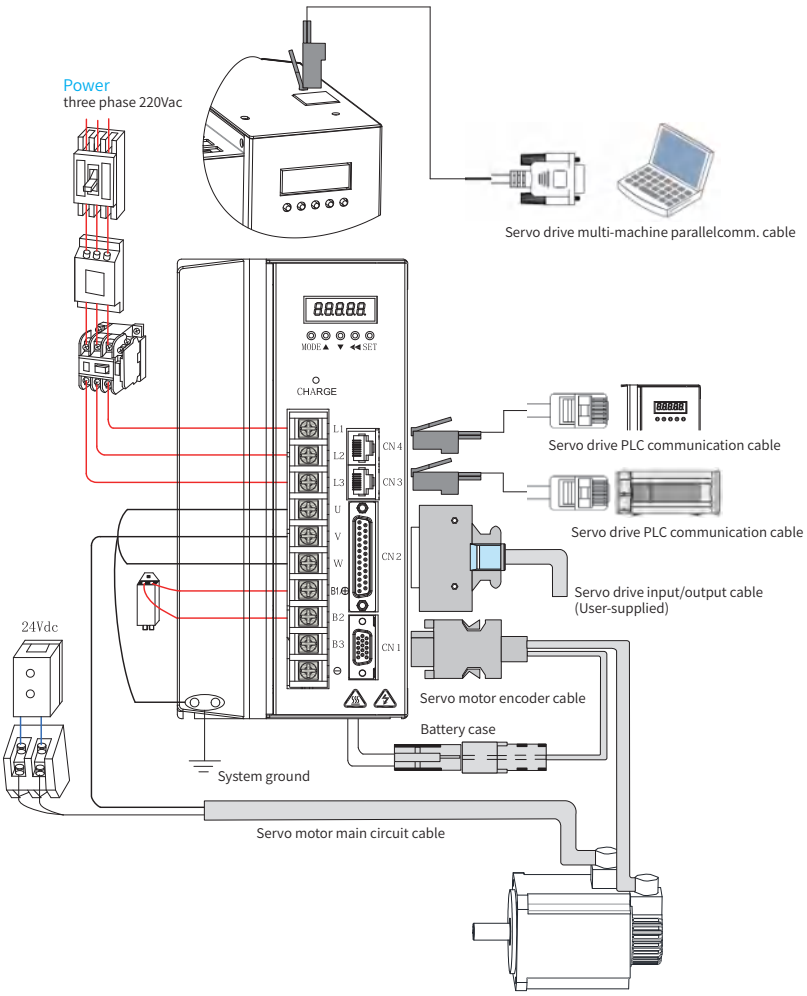

Please pay attention to the power supply capacity when connecting external control power supply or 24Vdc power supply, especially when supplying power to several drives or multiple brakes at the same time, insufficient power supply capacity will lead to insufficient supply current and failure of the drive or the brake. The braking power supply is a 24V DC voltage source. The power should refer to the motor model and meet the braking power requirements.

System wiring precautions:
1. When connecting an external braking resistor, please remove the short-circuit wire between terminals B2 and B3 of the servo drive before connecting. Pay attention to modify the internal parameters.
2. CN3 and CN4 define exactly the same communication interface for the two pins, which can be used arbitrarily between the two.
3. In single-phase 220V wiring, the main circuit terminals are L1 and L2, and the reserved terminals should not be connected.

MZ630N Series Servo Drive

Servo drive installation dimensions

MZ630NS1R6I MZ630NS2R8I	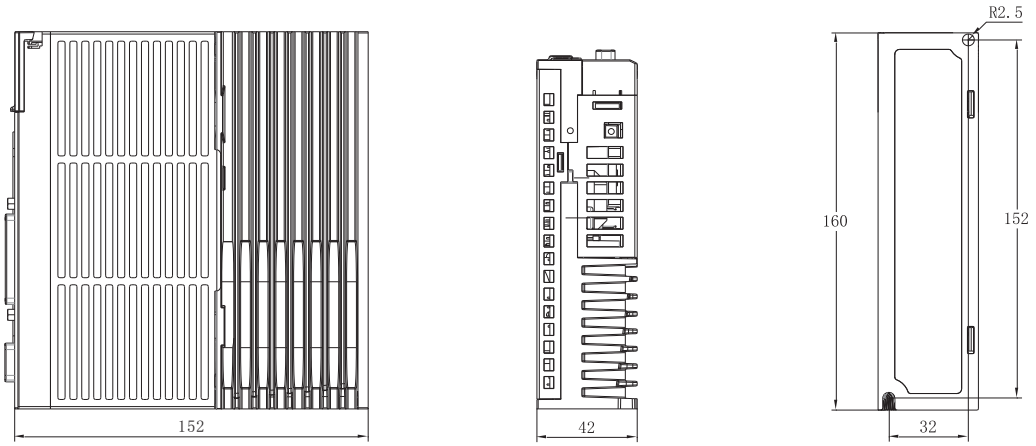
MZ630NS5R5I	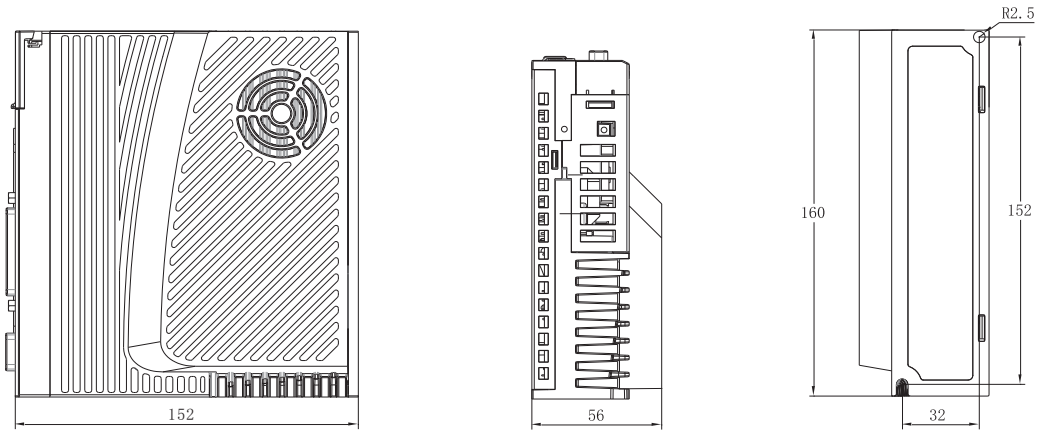
MZ630NS7R6I MZ630NS012I MZ630NS015I MZ630NS018I	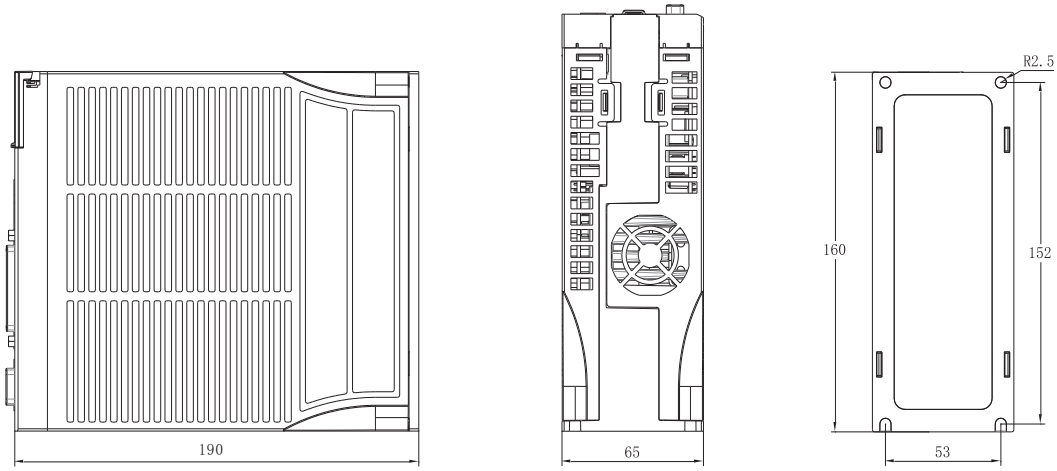

MZ630NT3R5I

MZ630NT5R4I

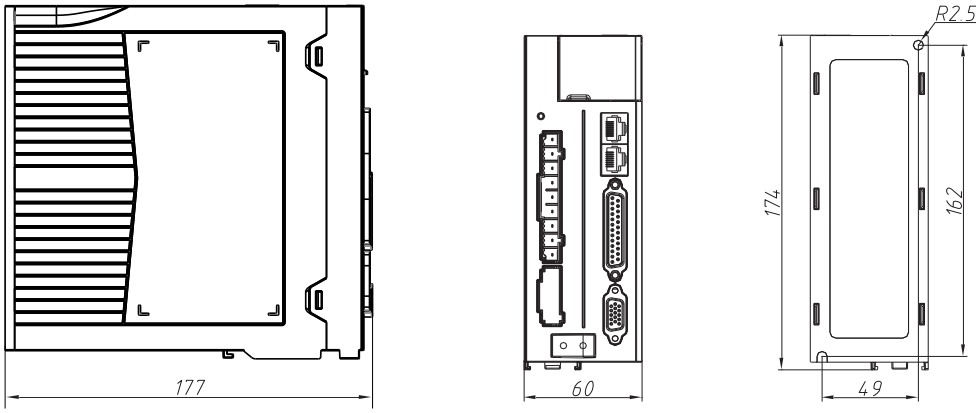

MZ630NT8R4I

MZ630NT012I

MZ630NT017I

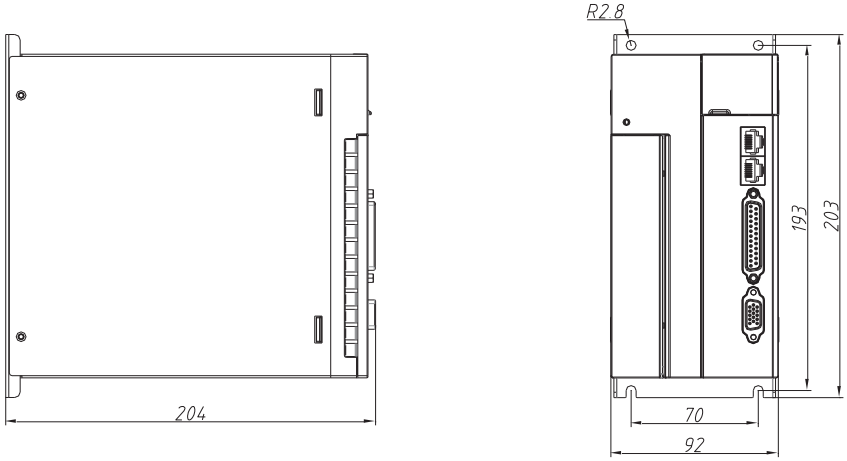

MZ630NS025I

MZ630NS032I

MZ630NT021I

MZ630NT026I

MZ630NT032I

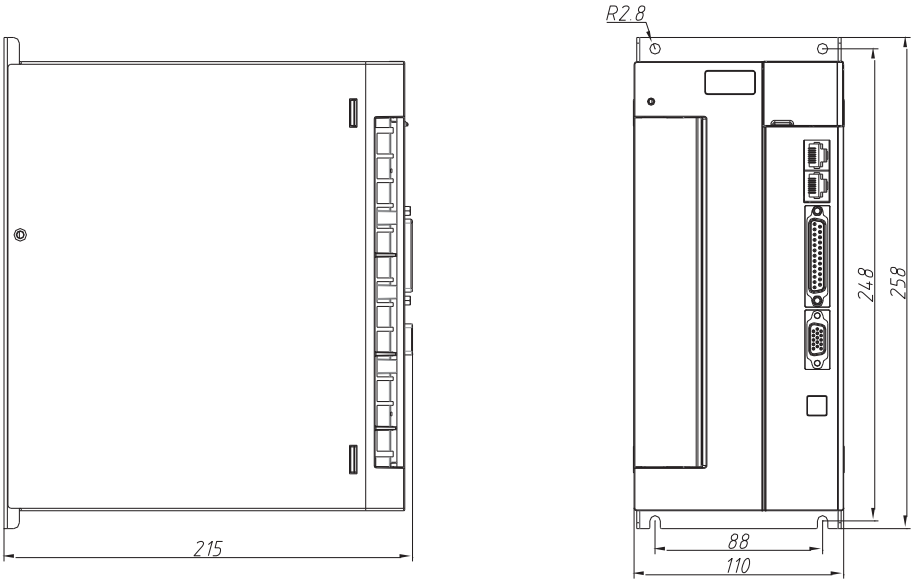

MZ630N Series Servo Drive

Servo drive installation dimensions

MZ630NS045I MZ630NT037I MZ630NT045I	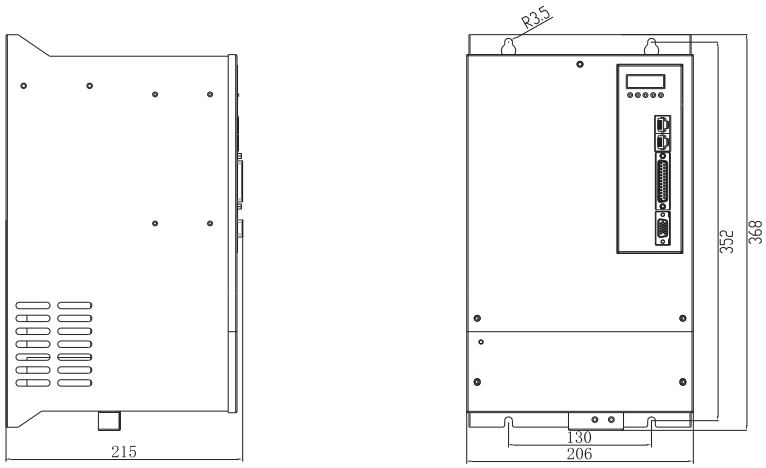
MZ630NS060I MZ630NS075I MZ630NT060I MZ630NT075I	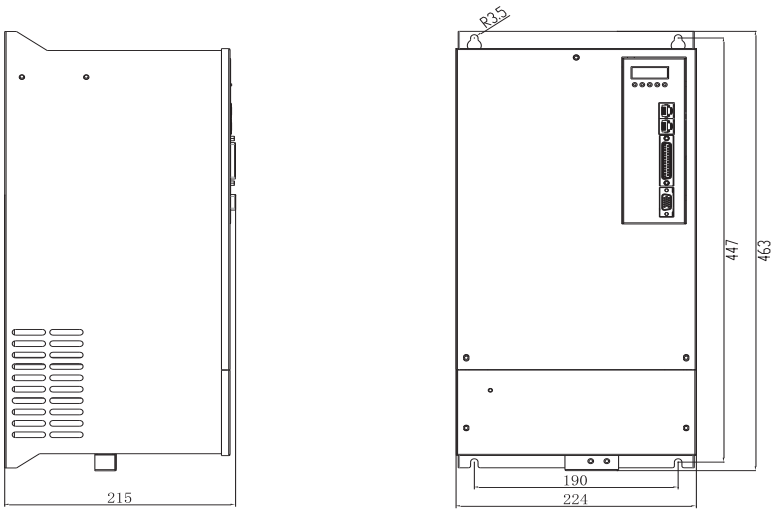
MZ630NT090I MZ630NT112I MZ630NT140I MZ630NT170I MZ630NT210I	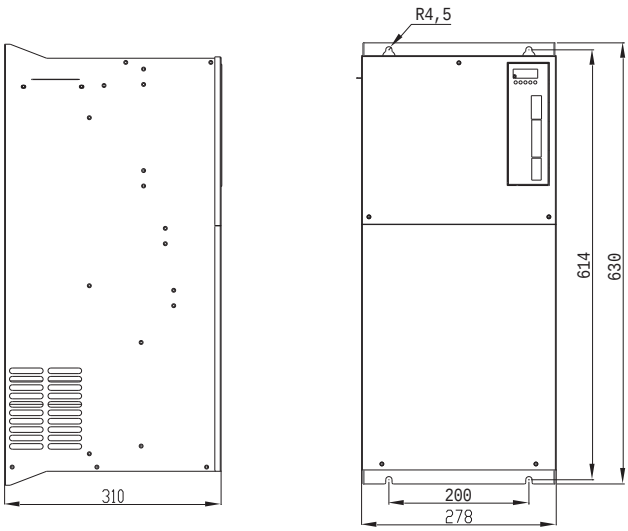

MZ820N Series Servo Drive

Name Rule

MZ820 N S 1B2B3B I - ★★

logo	Serial Number
MZ820	Servo Drive

logo	Product Category
N	EtherCAT bus type

logo	Product Category
S	220V

logo	1	2	3
Number axis	Axis1	Axis2	Axis3

logo	A	B	C	D	E
Rated current	1.6A	2.8A	5.5A	7.6A	12A

logo	Insallation method
I	Substrate Mounting (Standard)

logo	Non-standard specifications
vacancy	Standard machine
STO	With ST0 function

Product Characteristic

Type	Series	Characteristic
Servo drive	MZ820	**Quickly**
		0 3.0kHZ Corresponding bandwidth of speed loop
		Convenient
		0 Wiring is simple and convenient 0 Eliminate limit and origin 0 One-touch adjustment 0 Easy to replace encoder battery
		Precise
		0 The encoder resolution reaches 17/23bit
		Strong adaptability to the environment
		0 Meet safety standards 0 The motor reaches a higher waterproof level 0 Safe and reliable to use，Wiring is simple and convenient

MZ820N Series Servo Drive

Servo drive specifications and dimensions

Item			Specifications
Basic information	Control mode		IGBT PWM control, sine wave current drive mode 220V:three-phase full-wave rectification
	Encoder feedback		17bit、23bit
	Service conditions	Use/storage temperature	0~+45 °C (please derate if the ambient temperature is above 45°C , and the average load rate cannot be higher than 80%)/-40~+70°C
		Use/storage humidity	90%RH below(No condensation)
		Vibration/impact resistance	4.9m/s^2 / 19. 6m/s^2
		Protection level	IP10
		Altitude	Below 1000m
		Environmental pollution level	PD2
		Overvoltage level	OVCIII
EtherCAT slave specifications	EtherCAT Basic performance of slave station	Communication protocol	EtherCAT protocol
		Support Services	CoE (PDO、SDO)
		Synchronization mode	DC-Distributed clock
		Physical layer	100BASE-TX
		Baud rate	100Mbit/s (100Base-TX)
		Duplex mode	full duplex
		Topological structure	Circular, linear
		Transmission medium	Shielded Cat 5 or better network cable
		Transmission distance	Transmission distance: less than 100M between two nodes (good environment, good cables)
		Number of slave stations	The protocol supports up to 65535, and the actual use is not more than 100
		EtherCAT Frame length	44 bytes~1498 bytes
		Process data	1486 bytes maximum for a single Ethernet frame
		Synchronous jitter of two slave stations	＜ 1us
		Refresh time	1000 switch inputs and outputs about 30us; About 100us for 100 servo axes
		Communication error rate	10^{-10}Ethernet standard
	EtherCAT Configuration unit	FMM Uunit	8 个
		Storage Synchronization Snap-in	8 个
		Process data RAM	8KB
		Distributed clock	64-bit
		EEPROM volume	32Kbit
Input and output signals	Digital input signal	Signal assignment changes are possible	8DI DI function Alarm reset, gain switching, forward overtravel switch, reverse overtravel switch, positive external torque limit, negative external torque limit, forward jog, reverse jog, origin switch, position deviation clearing, probe selection
	Digital output signal	Signal assignment changes are possible	4DO DO function Prepare the servo drive, rotate the motor, complete the origin return and the electrical zero return, reach the torque and the speed.
Built-in fnctions	Overtravel (OT) prevention function		Stop immediately when POT or NOT operates
	Protective function		Overcurrent, overvoltage, undervoltage, overload, main circuit detection abnormality, radiator overheating, power supply phase loss, overspeed, encoder abnormality, CPU abnormality, parameter abnormality, others
	LED display function		Main power CHARGE, 6-digit LED display
	RS232 communication		Status display, user parameter setting, monitoring display, alarm tracking display, JOG operation and automatic tuning operation, mapping function of speed and torque command signals, etc.
	Others		Gain adjustment, alarm recording, JOG operation

Servo System Wiring connection

Circuit breaker for wiring
Used to protect the power line and cut off the circuit if over current.

Noise filter
Install a noise filter to prevent external noise.

Electromagnetic contactor
Turns on/off servo power .
Please install a surge suppressor.

Electromagnetic contactor
Use external resistor,remove the B2 and B3 tabs, connect the braking resistor between B1+ and B2;use an internal braking,short circuit B2 and B3.

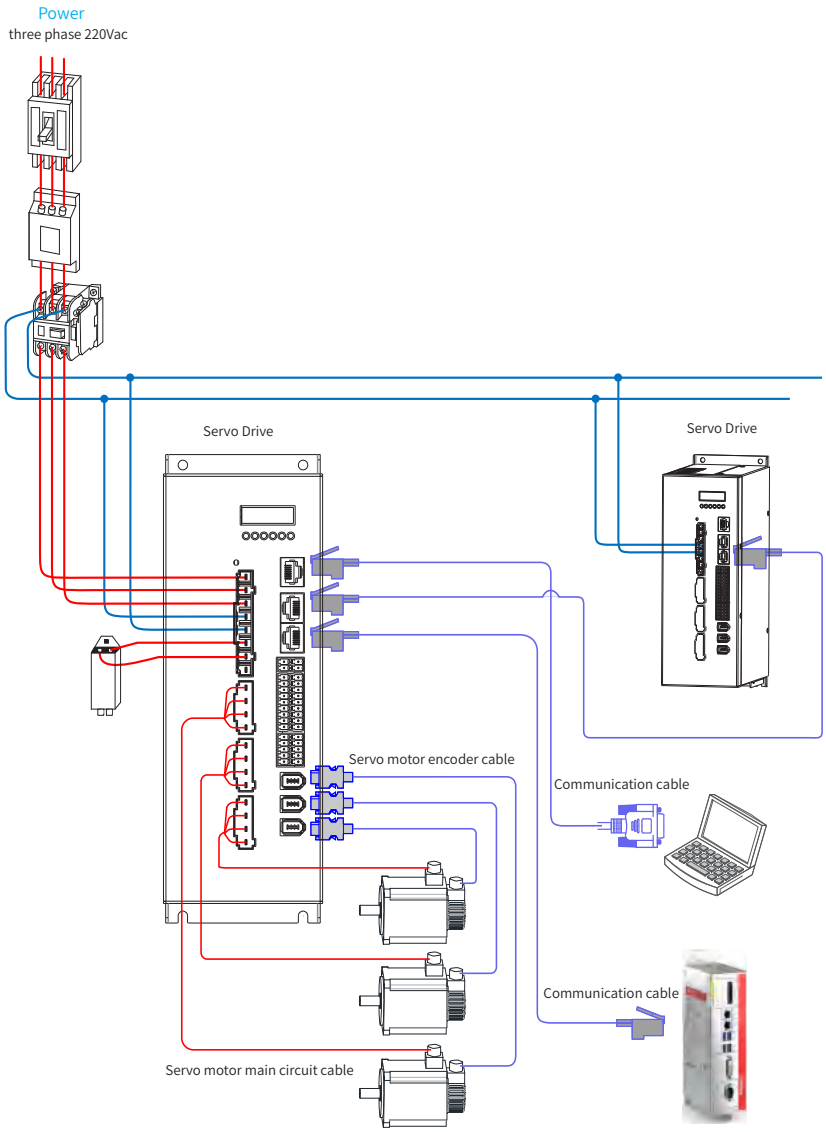

The servo drive is directly connected to the industrial power supply without using a transformer or other power source for isolation. To prevent cross-electric shock accidents in the servo system, please use a fuse or wiring circuit breaker on the input power supply. To create a safer system, please use a circuit breaker with both overload and short-circuit protection or a dedicated circuit breaker with ground wire protection.

It is strictly prohibited to use the electromagnetic contactor to run or stop the motor. Since the motor is a large inductance component, the instantaneous high voltage generated may breakdown the contactor.

Please pay attention to the power supply capacity when connecting an external control power supply or 24VDC power supply, especially when powering several drives or multiple brakes at the same time. Insufficient power supply capacity will lead to insufficient supply current and failure of the drive or brake. The braking power supply is a 24V DC voltage source. The power must refer to the motor model and meet the brake power requirements.

System wiring precautions:
1.When the servo system is in feedback braking, please connect the braking resistor between B1 ⊕ and B2; when using the internal braking resistor, please short-circuit B2 and B3 (B2 and B3 are short-circuited at the factory).
2.CN6 is the RS232 host computer connection port, and CN4 and CN5 are EtherCAT connection ports. Among them, CN5 is connected to the next slave device, and CN4 is connected to the master station or the previous slave device.

MZ690 Series Servo Drive hydraulic industry specialized

Name Rule

MZ690 - 0150 G - T4

- T4 — Three-phase 380V
- G — General
- 0150 — Power code: 0150: 15kW
- MZ690 — Serial Number

Servo driver parameters

Model	Power capacity KVA	Input current A	Output current A	Adapted motor kW
MZ690-0075G-T4	11.0	20.5	17.0	7.5
MZ690-0110G-T4	17.0	26.0	25.0	11
MZ690-0150G-T4	21.0	35.0	32.0	15
MZ690-0185G-T4	24.0	38.5	37.0	18.5
MZ690-0220G-T4	30.0	46.5	45.0	22
MZ690-0300G-T4	40.0	62.0	60.0	30
MZ690-0370G-T4	57.0	76.0	75.0	37
MZ690-0450G-T4	69.0	92.0	91.0	45
MZ690-0550G-T4	85.0	113.0	112.0	55
MZ690-0750G-T4	114.0	157.0	150.0	75
MZ690-0900G-T4	134.0	180.0	176.0	90
MZ690-1100G-T4	160.0	214.0	210.0	110

Servo drive specifications and dimensions

Item				Specifications
Basic information	Environment	Temp °C	Use environment temperature	0~+55°C (decrease if the ambient temperature is between 40°C and 50°C)
			Storage environment temperature	-20 ～ 65°C
		Humidity	Use environment humidity	20~85% RH below(No condensation)
			Storage environment humidity	20~85% RH below(No condensation)
		Use and preserve ambient air		indoor(no sunshine)、No corrosive gas, flammable gas, oil mist, dust
		Altitude		Below 1000m
		vibration		5.8m/s2(0.6G)below 10~60Hz(Can not be used continuously at resonance frequency)
	Insulation withstand voltage			Basic-FG between AC1500V 1min
	Control way			IGBT PWM control, sine wave current drive mode
	Encoder feedback			1：rotary encoder 2：17 bit/23bit (after adding a battery, it can be used as a multi-turn absolute encoder)
	Input terminal			Standard： 5 digital input terminals; 3 analog voltage input terminals, all support 0 ~ 1OV voltage input, of which Al3 can also support 0 ~ 20mA current input
	Output terminal			Standard： 1 digital output terminal; 2 relay output terminals; 2 analog output terminals, both support 0~20mA current output or voltage output
	Communication function		RS-485	For upper remote control communication (1:n)
			CAN	CANOPEN bus communication
	Regeneration function			Optional regenerative resistor, external regenerative resistor. Pay attention to modify internal parameters
	Control model			7control modes: speed control, position control, torque control, torque/speed control, speed/position control, torque/position, torque/speed/position hybrid control,hydraulic mode
Function	Control input			Alarm reset, proportional action switching, zero fixed function enable, forward drive prohibited, reverse drive prohibited, external torque limit for forward rotation, external torque limit for reverse rotation, forward jog, reverse jog, forward Reset switch, reverse reset switch, origin switch, emergency stop, servo enable, gain switch
	Control output			Servo ready, motor rotating, zero speed signal, speed reached, position reached, positioning approach signal, torque limit, speed limit, brake output, warning, servo failure, alarm code (3-digit output)
	Speed control	Control input		Servo ON, alarm reset, speed command reverse, zero speed clamp, internal command selection input 1, internal command selection input 2, internal command selection input 3, internal command selection input 4, forward rotation external torque limit input, reverse rotation External torque limit input, emergency stop
		Control output		Alarm status, servo preparation, brake release, torque limit output, speed limit output speed reached, speed consistent, motor rotation output, zero-speed signal output
	Torque Control	Control input		Servo ON, alarm reset, torque command reverse, zero speed clamp
		Control output		Alarm status, servo preparation, brake release, torque limit, speed limit output, emergency stop
		Torque command input		(Factory default setting, the range can be set by function code)
		Speed limit function		Positive and negative internal speed limit P03.27, P03.28
	Common	Speed observer function		YES
		Damping control function		YES
		Adaptive notch filter		YES
		Automatic adjustment function		YES
		Encoder output frequency division		YES
		Internal location planning function		YES
		Adjustment/ function setting		Use the host computer setting software "Servo studio" to adjust
		Protection		Over voltage, abnormal power supply, over current, overload, abnormal encoder, over speed, excessive position deviation, abnormal parameters, etc.

MZ690 Series Servo Drive

hydraulic industry specialized

Servo drive installation dimensions

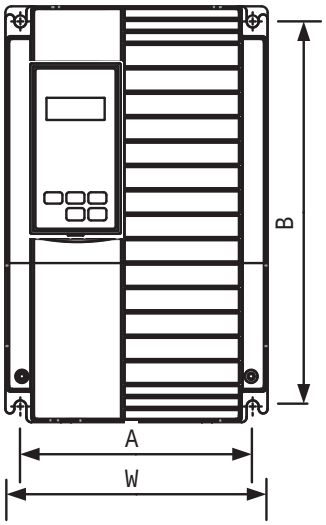

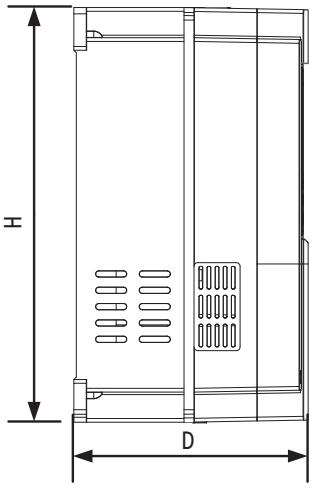

Model	Installation size（mm）		Outline size（mm）			Installation hole	Weight (KG) ≈
	A	B	W	H	D		
MZ690-0075G-T4	135	245	150	260	153	Φ6	3.9
MZ690-0110G-T4							
MZ690-0150G-T4							
MZ690-0185G-T4	186	306	210	330.5	188	Φ9.5	7.5
MZ690-0220G-T4							
MZ690-0300G-T4							
MZ690-0370G-T4	238	396	260	420	196	Φ8.5	12.5
MZ690-0450G-T4							
MZ690-0550G-T4	272	455	304	470	259	Φ9	23
MZ690-0750G-T4	200	614	278	630	329	Φ9	39
MZ690-0900G-T4							
MZ690-1100G-T4							

Keypad outline

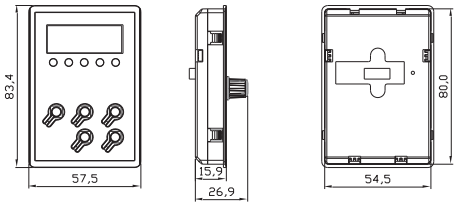

Below 18.5kW

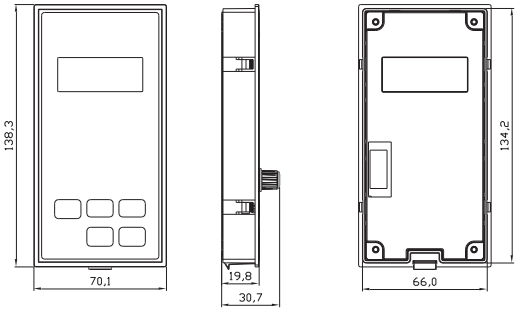

18.5kW and above

MZ650P Series Servo Drive

Name Rule

MZ650 P T 8R4 I - ★★

logo	Serial Number
MZ650	Servo Drive

logo	Product Category
P	pulse type

logo	Product Category
S	220V
T	380V

logo	3R5	5R4	…	210
Rated output current	3.5A	5.4A	…	210A

logo	Insallation method
I	Substrate Mounting (Standard)

R1	Rotary encoder
vacancy	17/23 bit encoder

Product Characteristic

Type	Series	Characteristic
Servo drive	MZ650P	**Quickly**
		0 3.0kHZ Corresponding bandwidth of speed loop
		Convenient
		0 Wiring is simple and convenient 0 Eliminate limit and origin 0 One-touch adjustment 0 Easy to replace encoder battery
		Precise
		0 The encoder resolution reaches 23bit
		Strong adaptability to the environment
		0 Meet safety standards 0 The motor reaches a higher waterproof level 0 Safe and reliable to use，Wiring is simple and convenient

MZ650P Series Servo Drive

Servo drive specifications

Item				Specifications												
机种名				MZ650PS □□□ I					MZ650PT □□□ I							
				025	032	045	060	075	3R5	5R4	8R4	012	017	021	026	032
Rated output current				25A	32A	45A	60A	75A	3.5A	5.4A	8.4A	12A	17A	21A	26A	32A
outlook	A(mm)			88		130	190		49		70			88		
	B(mm)			248		352	447		162		193			248		
	W(mm)			215		215	215		177		204			215		
	H(mm)			258		368	463		174		203			258		
	D(mm)			110		206	224		60		92			110		
	R(mm)			2.8		3.5	3.5		2.5		2.8			2.8		
	Weight(kg)			5.1		8.3	12		1.3		2.7			5.1		
	Input Power			Three phase AC200V-240V,-15% ～ 10%，50/60Hz					Three phase AC380V-440V，-15% ～ 10%，50/60Hz							
机种名				MZ650PT □□□ I												
				037		045	060		075	090		112		140	170	210
Rated output current				37A		45A	60A		75A	90A		112A		140A	170A	210A
outlook	A(mm)			130			190			200						
	B(mm)			352			447			614						
	W(mm)			215			215			310						
	H(mm)			368			463			630						
	D(mm)			206			224			278						
	R(mm)			3.5			3.5			4.5						
	Weight(kg)			8.3			12			39						
	Input Power			Three phase AC380V-440V，-15% ～ 10%，50/60Hz												
Basic information	Environment	Temp °C	Use environment temperature	0~+55°C (decrease if the ambient temperature is between 40°C and 50°C)												
			Storage environment temperature	-20 ～ 65°C												
		Humidity	Use environment humidity	20~85% RH below(No condensation)												
			Storage environment humidity	20~85% RH below(No condensation)												
		Use and preserve ambient air		indoor(no sunshine)、No corrosive gas, flammable gas, oil mist, dust												
		altitude		Below 1000m												
		vibration		5.8m/s2(0.6G)below 10~60Hz(Can not be used continuously at resonance frequency)												
	Insulation withstand voltage			Basic-FG between AC1500V 1min												
	Control way			IGBT PWM control, sine wave current drive mode												
	Encoder feedback			1： 23bit (after adding a battery, it can be used as a multi-turn absolute encoder) 2：rotary encoder												
	Control signal		Input	8 inputs (DC24V optocoupler isolation) switch according to the control mode function												
			Output	5 output (DC24V optocoupler isolation, open collector output) switch according to the control mode function												
	Pulse signal		Input	2 inputs (optocoupler isolation, RS-422 differential, open collector output)												
			Output	4 outputs (A/B/Z phase RS-422 differential; Z phase open collector output)												
	Comm. function		RS232	For PC communication (for "Servostudio" connection)												
			RS-485	For upper remote control communication (1:n)												
			CAN	CANOPEN bus communication												
	Regeneration function			Optional regenerative resistor, external regenerative resistor. Pay attention to modify internal parameters												
	Control model			6 control modes: speed control, position control, torque control, torque/speed control, speed/position control, torque/position, torque/speed/position hybrid control												

Item				Specifications
Function	Control input			Alarm reset, proportional action switching, zero fixed function enable, forward drive prohibited, reverse drive prohibited, external torque limit for forward rotation, external torque limit for reverse rotation, forward jog, reverse jog, forward Reset switch, reverse reset switch, origin switch, emergency stop, servo enable, gain switch
	Control output			Servo ready, motor rotating, zero speed signal, speed reached, position reached, positioning approach signal, torque limit, speed limit, brake output, warning, servo failure, alarm code (3-digit output)
	Position control	Pulse input	Maximum command pulse frequency	The maximum low speed is 500Kpps, and the pulse width cannot be less than 1μs Open collector: maximum 200Kpps, pulse width cannot be less than 2.5μs
			Input pulse signal form	Differential input; open collector
			Input pulse signal method	Pulse + direction, right angle phase difference (A phase + B phase), CW + CCW pulse
			Command pulse division/multiplication (Electronic gear ratio setting)	1~8388608/1~8388608
			Command filter	Smoothing filter, FIR filter
		Pulse output	Output pulse form	Phase A, Phase B: Differential output Z phase: differential output or open collector output
			Frequency division ratio	Arbitrary frequency division
			Output pulse function	Encoder position pulse and position pulse command (can be set)
	Speed control	Control input		Servo ON, alarm reset, speed command reverse, zero speed clamp, internal command selection input 1, internal command selection input 2, internal command selection input 3, internal command selection input 4, forward rotation external torque limit input, reverse rotation External torque limit input, emergency stop
		Control output		Alarm status, servo preparation, brake release, torque limit output, speed limit output speed reached, speed consistent, motor rotation output, zero-speed signal output
	Torque Control	Control input		Servo ON, alarm reset, torque command reverse, zero speed clamp
		Control output		Alarm status, servo preparation, brake release, torque limit, speed limit output, emergency stop
		Torque command input		(Factory default setting, the range can be set by function code)
		Speed limit function		Positive and negative internal speed limit P03.27, P03.28
	Common	Speed observer function		YES
		Damping control function		YES
		Adaptive notch filter		YES
		Automatic adjustment function		YES
		Encoder output frequency division		YES
		Internal location planning function		YES
		Adjustment/ function setting		Use the host computer setting software "Servo studio" to adjust
		Protection		Over voltage, abnormal power supply, over current, overload, abnormal encoder, over speed, excessive position deviation, abnormal parameters, etc.

MZ650P Series Servo Drive

Servo drive installation dimensions

MZ650PT3R5I MZ650PT5R4I	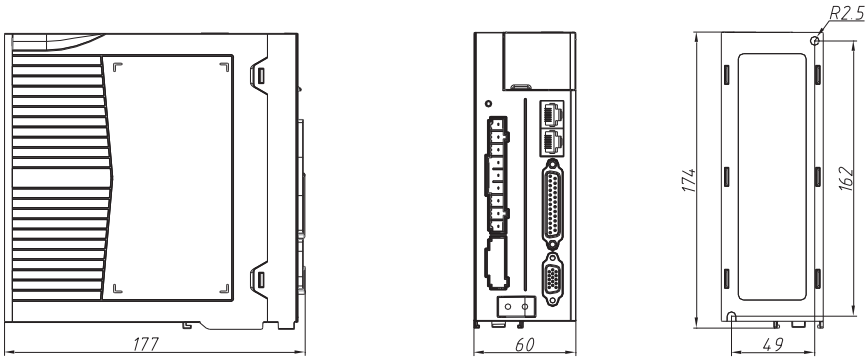
MZ650PT8R4I MZ650PT012I MZ650PT017I	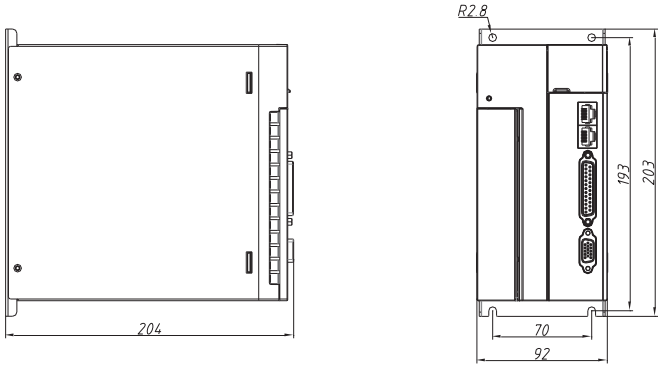
MZ650PS025I MZ650PS032I MZ650PT021I MZ650PT026I MZ650PT032I	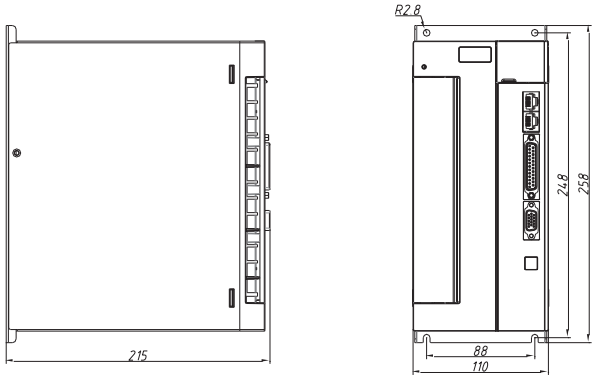

Servo drive installation dimensions

MZ650PS045I MZ650PT037I MZ650PT045I	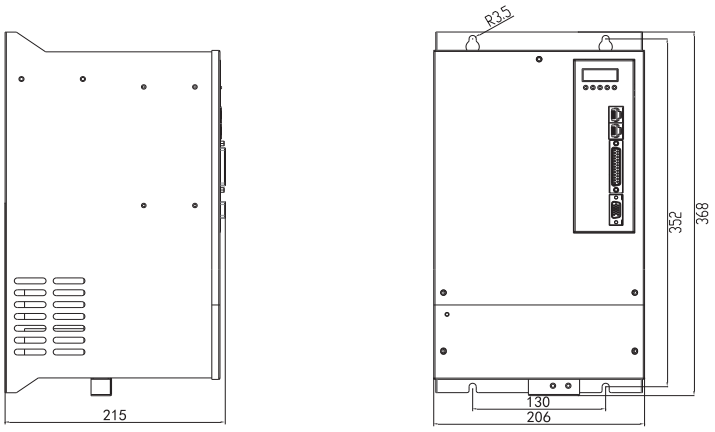
MZ650PS060I MZ650PS075I MZ650PT060I MZ650PT075I	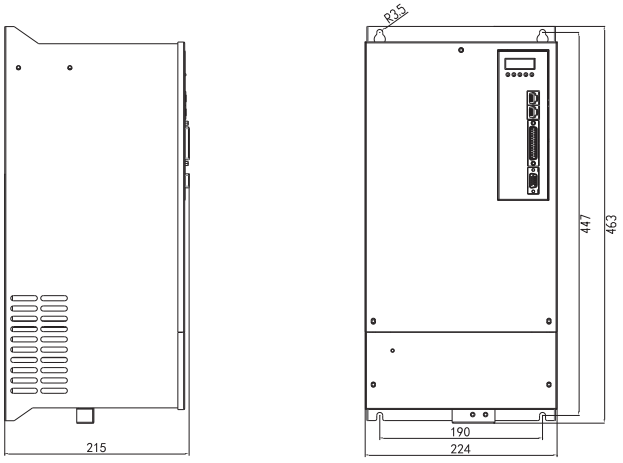
MZ650PT090I MZ650PT112I MZ650PT140I MZ650PT170I MZ650PT210I	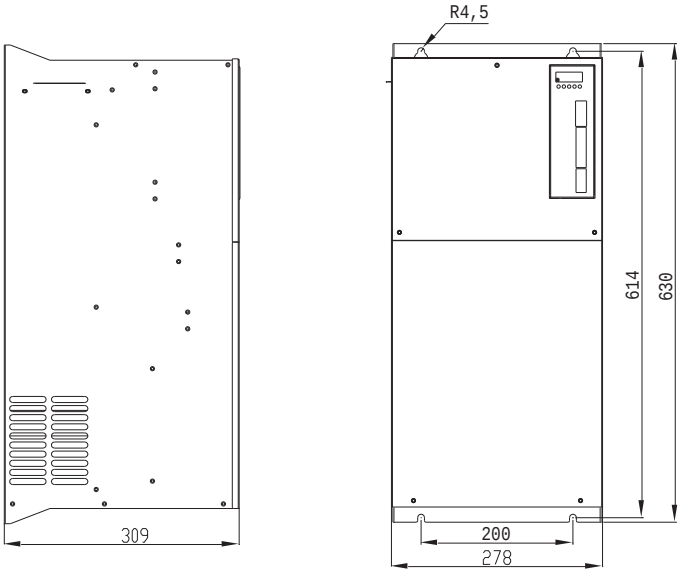

September 2, 2026

Chnchi Nanjing Electric Co.,Ltd.

Add: 95th xingangwan Road, luhe Development Zone, Luhe District, Nanjing, China
Tel: (+86)25-57506668 / 57506669
Fax: (+86)25-57506728
Web: www.chnchi.com